MOHAMED SATHAK A J COLLEGE OF ENGINEERING
Sponsored by Mohamed Sathak Trust
(Approved by AICTE, New Delhi and Affiliated to Anna University, Chennai)
Siruseri IT Park, Egattur, Chennai 603 103

Add on/Certificate programs

Academic Year 2019 – 2020

PRINCIPAL
MOHAMED SATHAK A.J.COLLEGE OF ENGINEERING
Rajiv Gandhi Road (OMR), Siruseri, IT Park
Chennai-603 103.

MOHAMED SATHAK A J COLLEGE OF ENGINEERING
Sponsored by Mohamed Sathak Trust
(Approved by AICTE, New Delhi and Affiliated to Anna University, Chennai)
Siruseri IT Park, Egattur, Chennai 603 103

Value Added Course

2019-2020

S.No	Name of Add on / Certificate programs offered	Course Code(if any) Collaboration Details	Year of offering	Number of students completing the course this year	Type of Add-on Course
1	Staad Pro	-	2019-2020	20	Self Framed Course
2	Robotic Process Automation(RPA)	-	2019-2020	47	Self Framed Course
3	IOT and Its Applications	-	2019-2020	27	Self Framed Course
4	Creo-Harness Design, GD&T-Industrial Standard	-	2019-2020	76	Self Framed Course
5	Training on CATIA-SOLID Model	-	2019-2020	44	Self Framed Course
6	PC Hardware & Networking	-	2019-2020	131	Self Framed Course

PRINCIPAL
MOHAMED SATHAK A.J.COLLEGE OF ENGINEERING
34, Rajiv Gandhi Road (OMR), Siruseri, IT Park
Chennai-603 103.

MOHAMED SATHAK A J COLLEGE OF ENGINEERING
Sponsored by Mohamed Sathak Trust
(Approved by AICTE, New Delhi and Affiliated to Anna University, Chennai) Siruseri IT Park,
Egattur, Chennai 603 103

DEPARTMENT OF CIVIL ENGINEERING

From ,

Mr.M.B.Shanmuharajan
Head Of The Department
Department of Civil Engineering
Mohamed Sathak A.J.College of Engineering,
Chennai – 603103.

To

The Principal,
Mohamed Sathak A.J.College of Engineering,
Chennai – 603103.

Respected Sir,

Sub: Permission for conducting ADD on course – reg.

With reference to the above cited subject, we have proposed to conduct ADD on courses for the students of Civil Engineering department. The selected courses are useful to the students for learning the emerging technical fields.

Kindly provide the permission for the same.

Year/Sem	Title	Dates
III/VII - Civil	STAAD Pro	9/12/2019 to 14/12/2019

Thanking you

Place : Chennai
Date: 5/12/2019

Your's faithfully
M.B

PRINCIPAL
MOHAMED SATHAK A.J.COLLEGE OF ENGINEERING
34, Rajiv Gandhi Road (OMR), Siruseri, IT Park
Chennai-603 103.

MOHAMED SATHAK A J COLLEGE OF ENGINEERING
Sponsored by Mohamed Sathak Trust
(Approved by AICTE, New Delhi and Affiliated to Anna University, Chennai) Siruseri IT Park,
Egattur, Chennai 603 103

DEPARTMENT OF CIVIL ENGINEERING

From,

Mr.M.B.Shanmuharajan

Head Of The Department

Department of Civil Engineering

Mohamed Sathak A.J.College of Engineering,
Chennai – 603103.

To

The Principal,

Mohamed Sathak A.J.College of Engineering,

Chennai – 603103.

Respected Sir,

Sub: Assigning of faculty for VAC course curriculum design for the academic year 2020-2021 reg.

Ref: Letter of Requisition for the appointment of faculty for ADD on course curriculum design for the academic year 2019-2020 Dated 9/12/2019 to 14/12/2019.

The undersigned appreciates the department for proposing to conduct such kind of programme. As per your recommendation and referring to the above subject. I am pleased to nominate the following faculty members for ADD on course curriculum design.

The above listed faculty is hereby instructed to design the curriculum taking in to consideration the thrust areas of the respective field and ensure it should enhance the employability opportunities for the students.

Title	Name of the Faculty
STAAD Pro	Ms.K.Gayathri AP/CIVIL

Thanking you

Your's faithfully

Place : Chennai

Date: 5/12/2019

PRINCIPAL
MOHAMED SATHAK A.J.COLLEGE OF E
34, Rajiv Gandhi Road (OMR), Siruseri, IT Park
Chennai-603 103.

M.B.

MOHAMED SATHAK A J COLLEGE OF ENGINEERING
Sponsored by Mohamed Sathak Trust
(Approved by AICTE, New Delhi and Affiliated to Anna University, Chennai) Siruseri IT Park,
Egattur, Chennai 603 103

DEPARTMENT OF CIVIL ENGINEERING

Date:5/12/2019

MSAJCE/CIVIL/COE/01/2019-202 0

CIRCULAR

It is hereby informed to Third Year students of CIVIL department STAAD Pro Class is arranged from 9/12/2019 to 14/12/2019at BIM lab. All are advised to attend positively.

Head of Department

M.B 5/12/2019

PRINCIPAL
MOHAMED SATHAK A.J.COLLEGE OF ENGINEERING
34, Rajiv Gandhi Road (OMR), Siruseri IT Park,
Chennai-603 103.

MOHAMED SATHAK A J COLLEGE OF ENGINEERING
Sponsored by Mohamed Sathak Trust
(Approved by AICTE, New Delhi and Affiliated to Anna University, Chennai) Siruseri IT Park,
Egattur, Chennai 603 103

DEPARTMENT OF CIVIL ENGINEERING

COURSE MODULE
B.E CIVIL ENGINEERING (REGULATIONS 2017)
VALUE ADDED COURSE
STAAD Pro

L	T	P	C
1	0	2	2

OBJECTIVES:

- STAAD is the abbreviation for Structural Analysis and Design. STAAD.Pro is one of the popular software that is used for analysing & designing structures like – buildings, towers, bridges, industrial, transportation and utility structures.

Module I 9

Introduction about beams,column and load specifications, Analyze and Design using Bently STAAD Pro - Breifing on job creating, Explaining about tools to be used for project - Analyze and Design of beams & colums using Bently STAAD Pro.

Module II 9

introduction about building elements - Analyze and Design of building using Bently STAAD Pro - Detailing on IS codes and Load specifications - Analyze and Design of building using Bently STAAD Pro.

Module III 9

Detailing on IS codes and Load specifications, Analyze and Design of building using Bently STAAD Pro. Introduction to Bridge components - Analyze and desgin of bridge using STAAD.Pro - Load specification to bridge design - Analyze and desgin of bridge using STAAD.Pro

Module IV 9

Introduction to circular water tank- Analyze and design of circular water using Bently STAAD Pro- lecture on tool to be used for the design - Analyze and design of circular water using Bently STAAD Pro- Load specification about circular water tank - Analyze and design of circular water using Bently STAAD Pro.

Module V 9

Introduction, Load specification & IS codes about Steel Truss - Analyze & design of Steel Truss using STAAD.Pro - Introduction to IS codes & tools used about Steel Truss - Analyze & design of Steel Truss using STAAD.Pro

TOTAL: 45 HOURS

PRINCIPAL
MOHAMED SATHAK A.J.COLLEGE OF
34, Rajiv Gandhi Road (OMR), Siruseri, IT Park
Chennai-603 103.

MOHAMED SATHAK A J COLLEGE OF ENGINEERING
Sponsored by Mohamed Sathak Trust
(Approved by AICTE, New Delhi and Affiliated to Anna University, Chennai) Siruseri IT Park,
Egattur, Chennai 603 103

DEPARTMENT OF CIVIL ENGINEERING

OUTCOMES:

Upon completion of the course,

- Individuals can work as Structure Designers, Project Managers, Building Analysts, Quality Analysts, Bridge, Designers etc. To get exposure to 2D & 3D drawings and infrastructure design towards to our country development program .

TEXT BOOKS:

1. Sham Tickoo (2015) Learning Bentley Staad.Pro V8I for Structural Analysis.
2. Prof. Sham Tickoo/TIET, Exploring Bentley'S Staad.Pro Connect Edition. by Prof. Sham Tickoo/TIET, BPB Publications

REFERENCES:

1. T. S. Sarma, Staad Pro V8i for Beginners: With Indian Examples.

PRINCIPAL
MOHAMED SATHAK A.J.COLLEGE OF EN G
34, Rajiv Gandhi Road (OMR), Siruseri, IT Park
Chennai-603 103.

MOHAMED SATHAK A J COLLEGE OF ENGINEERING
Sponsored by Mohamed Sathak Trust
(Approved by AICTE, New Delhi and Affiliated to Anna University, Chennai) Siruseri IT Park,
Egattur, Chennai 603 103

DEPARTMENT OF CIVIL ENGINEERING

Sl. No.	Topic	T / R* Book	Periods Required	Mode of Teaching
1	introduction about beams,column and load specifications	TB	2	Online
2	Analyze and Design using Bently STAAD Pro.	TB	2	Online
3	Breifing on job creating, Explaining about tools to be used for project.	TB	2	Online
4	Analyze and Design of beams & colums using Bently STAAD Pro.	RB	3	Online
5	introduction about building elements,	TB	2	Online
6	Analyze and Design of building using Bently STAAD Pro.	TB	2	Online
7	Detailing on IS codes and Load specifications	TB	2	Online
8	Analyze and Design of building using Bently STAAD Pro.	RB	3	Online
9	Detailing on IS codes and Load specifications	TB	2	Online
10	Analyze and Design of building using Bently STAAD Pro.	RB	2	Online
11	Introduction to Bridge components	RB	1	Online
12	Analyze and desgin of bridge using STAAD.Pro	TB	2	Online
13	Load specification to bridge design	RB	1	Online
14	Analyze and desgin of bridge using STAAD.Pro	RB	1	Online
15	Introduction to circular water tank	TB	2	Online
16	Analyze and design of circular water using Bently STAAD Pro.	TB	2	Online
17	lecture on tool to be used for the design	TB	1	Online
18	Analyze and design of circular water using Bently STAAD Pro.	TB	2	Online

PRINCIPAL
MOHAMED SATHAK A.J.COLLEGE OF ENGINEERING
34, Rajiv Gandhi Road (OMR), Siruseri, IT Park
Chennai-603 103.

19	Load specification about circular water tank	RB	1	Online
20	Analyze and design of circular water using Bently STAAD Pro.	TB	1	Online
21	Introduction, Load specification & IS codes about Steel Truss	TB	2	Online
22	Analyze & design of Steel Truss using STAAD.Pro	TB	2	Online
23	Introduction to IS codes & tools used about Steel Truss	RB	2	Online
24	Analyze & design of Steel Truss using STAAD.Pro	TB	3	Online

Quiz / Mini Projects / Model Develpoed if any

Quiz Conducted

Text / Reference Books

1	Sham Tickoo (2015) Learning Bentley Staad.Pro V8I for Structural Analysis.
2	Prof. Sham Tickoo/TIET, Exploring Bentley'S Staad.Pro Connect Edition. by Prof. Sham Tickoo/TIET, BPB Publications
3	T. S. Sarma, Staad Pro V8i for Beginners: With Indian Examples.

PRINCIPAL
MOHAMED SATHAK A.J.COLLEGE OF ENGINEERING
34, Rajiv Gandhi Road (OMR), Siruseri, IT Park
Chennai-603 103.

MOHAMED SATHAK A J COLLEGE OF ENGINEERING
Sponsored by Mohamed Sathak Trust
(Approved by AICTE, New Delhi and Affiliated to Anna University, Chennai)
Siruseri IT Park, Egattur, Chennai 603 103

DEPARTMENT OF CIVIL ENGINEERING

Value added course summary 2019 - 20

Course code and Name : STAAD Pro

Course Duration : 45 Hours

Year offered : III year Students 2019-20

Course Instructor : Ms.K.Gayathri AP/CIVIL

Course Outcome :

Upon completion of the course,

- Individuals can work as Structure Designers, Project Managers, Building Analysts, Quality Analysts, Bridge, Designers etc. To get exposure to 2D & 3D drawings and infrastructure design towards to our country development program .

Course Type : Add on Course

Theory and Practical with Hands on sessions

Assessment Mode :

Attendance : 45 Hours

No. of Participants : 20

Scheme of Exam : MCQ Online through GCR

Date of Exam : 10/03/2020

PRINCIPAL
MOHAMED SATHAK A.J.COLLEGE OF ENGINEERING
34, Rajiv Gandhi Road (OMR), Siruseri, IT Park
Chennai-603 103.

Course Coordinator

HoD

MOHAMED SATHAK A J COLLEGE OF ENGINEERING
Sponsored by Mohamed Sathak Trust
(Approved by AICTE, New Delhi and Affiliated to Anna University, Chennai) Siruseri IT Park,
Egattur, Chennai 603 103

DEPARTMENT OF CIVIL ENGINEERING

Assessment

1. Which of the following structural loads are not applied commonly to a building?
   a) Environmental load
   b) Live load
   c) Dead load
   d) Rain load
2. In the case of a structural member supporting more than one floor with load exceeding 100psf., what is the maximum permitted reduction %?
   a) 20
   b) 25
   c) 15
   d) 10
3. 3. Which of the following is statically determinate structure?
   a) Two hinged arch
   b) Fixed beam
   c) Double overhanging
   d) Continuous beam
4. 4. In the equation U-0.9D + 1.6W + 1.6H, what is the load factor for H if the structural action of H counteracts that due to W or E?
   a) 0.005
   b) 0
   c) 0.1
   d) 0.05
5. If we use link support in a structural system, then how many unknowns would we have?
   a) 1
   b) 2
   c) 0
   d) 4
6. 7. Which of the following material is not used in making trusses?
   a) Metal bars
   b) Concrete
   c) Wooden struts
   d) Channel
7. Why is base plate provided in short roof trusses?
   a) For rigidity
   b) As provision for temperature related expansion/contraction
   c) To transmit load effectively
   d) For stability
8. Which of the following is false for deflection of a point nearby a fixed support?
   a) Displacement and slope is zero
   b) Displacement as well as slope is non-zero
   c) Displacement is zero
   d) Slope is zero

PRINCIPAL
MOHAMED SATHAK A.J.COLLEGE OF ENG.
84, Rajiv Gandhi Road (OMR), Siruseri, IT Park
Chennai-603 103.

DEPARTMENT OF CIVIL ENGINEERING

9. Which structure will perform better during earthquake?
   a) Statically determinate and indeterminate
   b) Depends upon magnitude of earthquake
   c) Statically indeterminate
   d) Statically determinate
10. Which type of structure would cost less in terms of materials?
   a) Statically indeterminate
   b) Both will cost equally
   c) Depends upon loading
   d) Statically determinate
11. Which of the following is carried by truss members?
   a) flexural load
   b) bending load
   c) axial load
   d) shear load
12. Which of the following methods of structural analysis is a force method?
   a) three moment equation
   b) slope deflection method
   c) column analogy method
   d) moment distribution method
13. Force-displacement requirement of statically indeterminate structures depend upon which factor?
   a) supports
   b) material's response
   c) position of load applied
   d) magnitude of load applied
14. list out the Loadings consider in Staad.Pro
   i. Self weight
   ii. Nodal Load
   iii. Member load
   iv. All the above
15. Which load is consider in slab?
   i Member load
   ii. Area Load
   iii. Floor Load
   vi. Plate Loads
16. Earthquake loads is also called as ____
   i.Seismic load
   ii. Area Load
   iii. Floor Load
   vi. Plate Loads
17. the load, in pounds per square foot, placed on the exterior of a structure by wind
   i Member load
   ii. Area Load
   iii. Floor Load
   vi. Wind Load

PRINCIPAL
MOHAMED SATHAK A.J.COLLEGE OF ENGIN
34, Rajiv Gandhi Road (OMR), Siruseri, IT Park
Chennai-603 103.

MOHAMED SATHAK A J COLLEGE OF ENGINEERING
Sponsored by Mohamed Sathak Trust
(Approved by AICTE, New Delhi and Affiliated to Anna University, Chennai) Siruseri IT Park,
Egattur, Chennai 603 103

DEPARTMENT OF CIVIL ENGINEERING

18. The load to which a structure is subjected in addition to its own weight.
    i Dead load
    ii. Live Load
    iii. Floor Load
    vi. Wind Load

19. IS 875 a part 1 is a _____
    i Dead load
    ii. Live Load
    iii. Floor Load
    vi. Wind Load

20. Strength requirements are specified in terms of limit loads. the maximum loads to be expected in _____

    i Service Load
    ii. Live Load
    iii. Floor Load
    vi. Wind Load

PRINCIPAL
SATHAK A.J.COLLEGE OF ENG
34, Rajiv Gandhi Road (OMR), Siruseri, IT Park
Chennai-603 103.

KISHORE KUMAR. R
311817103009
III yr.

MOHAMED SATHAK A J COLLEGE OF ENGINEERING
Sponsored by Mohamed Sathak Trust
(Approved by AICTE, New Delhi and Affiliated to Anna University, Chennai) Siruseri IT Park,
Egattur, Chennai 603 103

DEPARTMENT OF CIVIL ENGINEERING

Assessment

1. Which of the following structural loads are not applied commonly to a building?
   a) Environmental load
   b) Live load
   c) Dead load
   d) Rain load
2. In the case of a structural member supporting more than one floor with load exceeding 100psf., what is the maximum permitted reduction %?
   a) 20
   b) 25
   c) 15
   d) 10

19/20

3. 3. Which of the following is statically determinate structure?
   a) Two hinged arch
   b) Fixed beam
   c) Double overhanging
   d) Continuous beam
4. 4. In the equation U-0.9D + 1.6W + 1.6H, what is the load factor for H if the structural action of H counteracts that due to W or E?
   a) 0.005
   b) 0
   c) 0.1
   d) 0.05
5. If we use link support in a structural system, then how many unknowns would we have?
   a) 1
   b) 2
   c) 0
   d) 4
6. 7. Which of the following material is not used in making trusses?
   a) Metal bars
   b) Concrete
   c) Wooden struts
   d) Channel
7. Why is base plate provided in short roof trusses?
   a) For rigidity
   b) As provision for temperature related expansion/contraction
   c) To transmit load effectively
   d) For stability
8. Which of the following is false for deflection of a point nearby a fixed support?
   a) Displacement and slope is zero
   b) Displacement as well as slope is non-zero
   c) Displacement is zero
   d) Slope is zero

PRINCIPAL
MOHAMED SATHAK A.J.COLLEGE OF ENGINEERING
34, Rajiv Gandhi Road (OMR), Siruseri, IT Park
Chennai-603 103.

DEPARTMENT OF CIVIL ENGINEERING

9. Which structure will perform better during earthquake?
   a) Statically determinate and indeterminate
   b) Depends upon magnitude of earthquake
   c) Statically indeterminate
   d) Statically determinate
10. Which type of structure would cost less in terms of materials?
   a) Statically indeterminate
   b) Both will cost equally
   c) Depends upon loading
   d) Statically determinate
11. Which of the following is carried by truss members?
   a) flexural load
   b) bending load
   c) axial load
   d) shear load
12. Which of the following methods of structural analysis is a force method?
   a) three moment equation
   b) slope deflection method
   c) column analogy method
   d) moment distribution method
13. Force-displacement requirement of statically indeterminate structures depend upon which factor?
   a) supports
   b) material's response
   c) position of load applied
   d) magnitude of load applied
14. list out the Loadings consider in Staad.Pro
   i. Self weight
   ii. Nodal Load
   iii. Member load
   iv. All the above
15. Which load is consider in slab?
   i Member load
   ii. Area Load
   iii. Floor Load
   vi. Plate Loads
16. Earthquake loads is also called as ____
   i. Seismic load
   ii. Area Load
   iii. Floor Load
   vi. Plate Loads
17. the load, in pounds per square foot, placed on the exterior of a structure by wind
   i Member load
   ii. Area Load
   iii. Floor Load
   vi. Wind Load

PRINCIPAL
MOHAMED SATHAK A.J.COLLEGE OF ENGINEERING
34, Rajiv Gandhi Road (OMR), Siruseri, IT Park
Chennai-603 103.

MOHAMED SATHAK A J COLLEGE OF ENGINEERING
Sponsored by Mohamed Sathak Trust
(Approved by AICTE, New Delhi and Affiliated to Anna University, Chennai) Siruseri IT Park,
Egattur, Chennai 603 103

DEPARTMENT OF CIVIL ENGINEERING

18. The load to which a structure is subjected in addition to its own weight.
    i. Dead load
    ii. Live Load
    iii. Floor Load
    vi. Wind Load

19. IS 875 a part 1 is a _____
    i Dead load
    ii. Live Load
    iii. Floor Load
    vi. Wind Load

20. Strength requirements are specified in terms of limit loads. the maximum loads to be expected in _____
    i. Service Load
    ii. Live Load
    iii. Floor Load
    vi. Wind Load

PRINCIPAL
MOHAMED SATHAK A.J.COLLEGE OF ENGINEERING
34, Rajiv Gandhi Road (OMR), Siruseri, IT Park
Chennai-603 103.

MOHAMED SATHAK A J COLLEGE OF ENGINEERING
Sponsored by Mohamed Sathak Trust
(Approved by AICTE, New Delhi and Affiliated to Anna University, Chennai)
Siruseri IT Park, Egattur, Chennai 603 103

DEPARTMENT OF CIVIL ENGINEERING

Academic year 2019 – 2020

Enrolled Student Name List

Sl.No	Name of the Student	Register No.	Certificate Program Staad Pro
1	AMSHA AFRIDEEN .A	311817103001	✓
2	ANTONY DARSHAN A	311817103002	✓
3	ARUN.M	311817103003	✓
4	ASIF ALI J	311817103004	✓
5	FAREED AHAMED .S	311817103005	✓
6	IJAS AHAMED P.M.	311817103006	✓
7	ISMATH ALI. M	311817103007	✓
8	JAFFER ABBAS M.A.	311817103008	✓
9	KISHORE KUMAR.R	311817103009	✓
10	KISHORE KUMAR.S	311817103010	✓
11	MOHAMED SAMEEM MOHIDEEN	311817103014	✓
12	MOHAMED SHAHEEM S.B	311817103015	✓
13	MOHAMED TAJAMMUL	311817103016	✓
14	MOHAMED UMAR .M	311817103017	✓
15	MOHAMMED AMEEN.A	311817103018	✓
16	MOHAMMED ISMAAIL.S	311817103019	✓
17	SAMEEMUDEEN A	311817103023	✓
18	SURENDER .M	311817103025	✓
19	SYED MOHAMMED USAID MOHIUDDIN	311817103026	✓
20	NAINA MOHAMED BASIDH	311817103701	✓

PRINCIPAL
MOHAMED SATHAK A.J.COLLEGE OF ENGINEERING
34, Rajiv Gandhi Road (OMR), Siruseri, IT Park
Chennai-603 103.

MOHAMED SATHAK A J COLLEGE OF ENGINEERING
Sponsored by Mohamed Sathak Trust
(Approved by AICTE, New Delhi and Affiliated to Anna University, Chennai)
Siruseri IT Park, Egattur, Chennai 603 103

DEPARTMENT OF CIVIL ENGINEERING

Sl.No	Name of theStudent	Register No.	3/12/19	21/12/19	4/1/20	22/2/20	9/3/20
1	AMSHA AFRIDEEN .A	311817103001					
2	ANTONY DARSHAN A	311817103002					
3	ARUN.M	311817103003					
4	ASIF ALI J	311817103004					
5	FAREED AHAMED .S	311817103005					
6	IJAS AHAMED P.M.	311817103006					
7	ISMATH ALI. M	311817103007					
8	JAFFER ABBAS M.A.	311817103008					
9	KISHORE KUMAR.R	311817103009					
10	KISHORE KUMAR.S	311817103010					
11	MOHAMED SAMEEM MOHIDEEN	311817103014					
12	MOHAMED SHAHEEM S.B	311817103015					
13	MOHAMED TAJAMMUL	311817103016					
14	MOHAMED UMAR .M	311817103017					
15	MOHAMMED AMEEN.A	311817103018					
16	MOHAMMED ISMAAIL.S	311817103019					
17	SAMEEMUDEEN A	311817103023					
18	SURENDER .M	311817103025					
19	SYED MOHAMMED USAID MOHIUDDIN	311817103026					
20	NAINA MOHAMED BASIDH	311817103701					

PRINCIPAL
MOHAMED SATHAK A.J.COLLEGE OF ENGINEERING
34, Rajiv Gandhi Road (OMR), Siruseri, IT Park
Chennai-603 103.

MOHAMED SATHAK A J COLLEGE OF ENGINEERING
Sponsored by Mohamed Sathak Trust
(Approved by AICTE, New Delhi and Affiliated to Anna University, Chennai)
Siruseri IT Park, Egattur, Chennai 603 103

DEPARTMENT OF CIVIL ENGINEERING

Sl.No	Name of theStudent	Register No.	Status of Qualifying
1	AMSHA AFRIDEEN .A	311817103001	Qualified
2	ANTONY DARSHAN A	311817103002	Qualified
3	ARUN.M	311817103003	Qualified
4	ASIF ALI J	311817103004	Qualified
5	FAREED AHAMED .S	311817103005	Qualified
6	IJAS AHAMED P.M.	311817103006	Qualified
7	ISMATH ALI. M	311817103007	Qualified
8	JAFFER ABBAS M.A.	311817103008	Qualified
9	KISHORE KUMAR.R	311817103009	Qualified
10	KISHORE KUMAR.S	311817103010	Qualified
11	MOHAMED SAMEEM MOHIDEEN	311817103014	Qualified
12	MOHAMED SHAHEEM S.B	311817103015	Qualified
13	MOHAMED TAJAMMUL	311817103016	Qualified
14	MOHAMED UMAR .M	311817103017	Qualified
15	MOHAMMED AMEEN.A	311817103018	Qualified
16	MOHAMMED ISMAAIL.S	311817103019	Qualified
17	SAMEEMUDEEN A	311817103023	Qualified
18	SURENDER .M	311817103025	Qualified
19	SYED MOHAMMED USAID MOHIUDDIN	311817103026	Qualified
20	NAINA MOHAMED BASIDH	311817103701	Qualified

PRINCIPAL
MOHAMED SATHAK A.J. COLLEGE OF ENGINEERING
34, Rajiv Gandhi Road (OMR), Siruseri, IT Park
Chennai-603 103.

Certificate Of Completion

AlphaCADD
Smart way to Success...
1, 1st Floor, Beteson's Complex
Ramasamy Street, West Tambaram
Chennai-600 045.

PRINCIPAL
MOHAMED SATHAK A.J.COLLEGE OF ENGINEERING
No.34, Rajiv Gandhi Road (OMR), Siruseri, IT Park
Chennai-603 103.

This is to certify that Mr./Ms. **AMSHA AFRIDEEN A**

has successfully completed the professional training program

on **STAAD PRO**

at **Mohamed Sathak AJ College of Engineering**

Period : from **03-12-2019** to **09-03-2020**

grade : **A** Student ID No: **ACS20201**

Date : **09-03-2020**

Managing Director

Alpha CADD
Chennai-45

AlphaCADD

Certificate Of Completion

AlphaCADD
Smart way to Success...
#1, 1st Floor, Beteson's Complex
Kamasamy Street, West Tambaram
Chennai-600 045.

PRINCIPAL
MOHAMED SATHAK A.J.COLLEGE OF ENGINEERING
34, Rajiv Gandhi Road (OMR), Siruseri, IT Park
Chennai-603 103.

This is to certify that Mr./Ms. **ANTONY DARSHAN A**

has successfully completed the professional training program

on **STAAD PRO**

at **Mohamed Sathak AJ College of Engineering**

Period : from **03-12-2019** to **09-03-2020**

grade : **A** Student ID No: **ACS20202**

Date : **09-03-2020**

Managing Director

Alpha CADD Chennai-45

Certificate Of Completion

AlphaCADD
Smart way to Success...
1, 1st Floor, Beteson's Complex
Ramasamy Street, West Tambaram
Chennai-600 045.

PRINCIPAL
MOHAMED SATHAK A.J.COLLEGE OF ENGINEERING
34, Rajiv Gandhi Road (OMR), Siruseri IT Park
Chennai-603 103

This is to certify that Mr./Ms. **ARUN.M**

has successfully completed the professional training program

on **STAAD PRO**

at **Mohamed Sathak AJ College of Engineering**

Period : from **03-12-2019** to **09-03-2020**

grade : **A** Student ID No: **ACS20203**

Date : **09-03-2020**

Managing Director

Alpha CADD Chennai-45

Certificate Of Completion

PRINCIPAL
MOHAMED SATHAK A.J.COLLEGE OF ENGINEERING
24, Rajiv Gandhi Road (OMR), Siruseri, IT Park
Chennai-603 103.

AlphaCADD
Smart way to Success...

1, 1st Floor, Beteson's Complex
Ramasamy Street, West Tambaram
Chennai-600 045.

This is to certify that Mr./Ms. **ASIF ALI .J**

has successfully completed the professional training program

on **STAAD PRO**

at **Mohamed Sathak AJ College of Engineering**

Period : from **03-12-2019** to **09-03-2020**

grade : **A** Student ID No: **ACS20204**

Date : **09-03-2020**

Managing Director

Alpha CADD Chennai-45

Certificate Of Completion

AlphaCADD
Smart way to Success...

1, 1st Floor, Beteson's Complex
Ramasamy Street, West Tambaram
Chennai-600 045.

PRINCIPAL
MOHAMED SATHAK A.J.COLLEGE OF ENGINEERING
34, Rajiv Gandhi Road (OMR), Siruseri, IT Park
Chennai-603 103

This is to certify that Mr./Ms. **FAREED AHAMED S**

has successfully completed the professional training program

on **STAAD PRO**

at **Mohamed Sathak AJ College of Engineering**

Period : from **03-12-2019** to **09-03-2020**

grade : **A** Student ID No: **ACS20205**

Alpha CADD * Chennai-45 *

Date : **09-03-2020**

Managing Director

Certificate Of Completion

PRINCIPAL
MOHAMED SATHAK A.J.COLLEGE OF ENGINEERING
34, Rajiv Gandhi Road (OMR), Siruseri, IT Park
Chennai-603 103.

AlphaCADD
Smart way to Success...

1, 1st Floor, Beteson's Complex
Ramasamy Street, West Tambaram
Chennai-600 045.

This is to certify that Mr./Ms. **IJAS AHAMED P.M**

has successfully completed the professional training program

on **STAAD PRO**

at **Mohamed Sathak AJ College of Engineering**

Period : from **03-12-2019** to **09-03-2020**

grade : **A** Student ID No: **ACS20206**

Date : **09-03-2020**

Managing Director

Alpha CADD Chennai-45

Certificate Of Completion

PRINCIPAL
MOHAMED SATHAK A.J.COLLEGE OF ENGINEERING
34, Rajiv Gandhi Road (OMR), Siruseri, IT Park
Chennai-603 103.

AlphaCADD
Smart way to Success...

1, 1st Floor, Beteson's Complex
Ramasamy Street, West Tambaram
Chennai-600 045.

This is to certify that Mr./Ms. **ISMATH ALI. M**

has successfully completed the professional training program

on **STAAD PRO**

at **Mohamed Sathak AJ College of Engineering**

Period : from **03-12-2019** to **09-03-2020**

grade : **A** Student ID No: **ACS20207**

Date : **09-03-2020**

Managing Director

AlphaCADD Chennai-45

Certificate Of Completion

PRINCIPAL
MOHAMED SATHAK A.J.COLLEGE OF ENGINEERI
No.34, Rajiv Gandhi Road (OMR), Siruseri, IT Park
Chennai-603 103.

AlphaCADD
Smart way to Success...

1, 1st Floor, Beteson's Complex
Ramasamy Street, West Tambaram
Chennai-600 045.

This is to certify that Mr./Ms.....**JAFFER ABBAS M.A**.....

has successfully completed the professional training program

on.....**STAAD PRO**.....

at **Mohamed Sathak AJ College of Engineering**.....

Period : from..**03-12-2019**.. to **09-03-2020**

grade : ...**A**... Student ID No: .**ACS20208**.....

Date : **09-03-2020**

Managing Director

Alpha CADD Chennai-45

Certificate Of Completion

PRINCIPAL
MOHAMED SATHAK A.J.COLLEGE OF ENGINEERING
Rajiv Gandhi Road (OMR), Siruseri, IT Park
Chennai-603 103.

AlphaCADD
Smart way to Success...

1, 1st Floor, Beteson's Complex
Ramasamy Street, West Tambaram
Chennai-600 045.

This is to certify that Mr./Ms. **KISHORE KUMAR.R**

has successfully completed the professional training program

on **STAAD PRO**

at **Mohamed Sathak AJ College of Engineering**

Period : from **03-12-2019** to **09-03-2020**

grade : **A** Student ID No: **ACS20209**

Alpha CADD * Chennai-45 *

Date : **09-03-2020**

Managing Director

Certificate Of Completion

PRINCIPAL
MOHAMED SATHAK A.J.COLLEGE OF ENGINEE
Rajiv Gandhi Road (OMR), Siruseri, IT P
Chennai-603 103.

AlphaCADD
Smart way to Success...

1, 1st Floor, Beteson's Complex
Ramasamy Street, West Tambaram
Chennai-600 045.

This is to certify that Mr./Ms. **KISHORE KUMAR.S**

has successfully completed the professional training program

on **STAAD PRO**

at **Mohamed Sathak AJ College of Engineering**

Period : from **03-12-2019** to **09-03-2020**

grade : **A** Student ID No: **ACS202010**

Alpha CADD * Chennai-45 *

Date : **09-03-2020**

Managing Director

Certificate Of Completion

PRINCIPAL
MOHAMED SATHAK A.J.COLLEGE OF ENGINEERING
34, Rajiv Gandhi Road (OMR), Siruseri, IT Park
Chennai-603 103

AlphaCADD
Smart way to Success...

1, 1st Floor, Beteson's Complex
Ramasamy Street, West Tambaram
Chennai-600 045.

This is to certify that Mr./Ms. **MOHAMED SAMEEM MOHIDEEN**

has successfully completed the professional training program

on **STAAD PRO**

at **Mohamed Sathak AJ College of Engineering**

Period : from **03-12-2019** to **09-03-2020**

grade : **A** Student ID No: **ACS202011**

Alpha CADD * Chennai-45 *

Managing Director

Date : **09-03-2020**

Certificate Of Completion

PRINCIPAL
MED SATHAK A.J.COLLEGE OF ENGINEERING
Rajiv Gandhi Road (OMR), Siruseri, IT Park
Chennai-603 103.

AlphaCADD
Smart way to Success...

1, 1st Floor, Beteson's Complex
Ramasamy Street, West Tambaram
Chennai-600 045.

This is to certify that Mr./Ms. **MOHAMED SHAHEEM S.B**

has successfully completed the professional training program

on **STAAD PRO**

at **Mohamed Sathak AJ College of Engineering**

Period : from **03-12-2019** to **09-03-2020**

grade : **A** Student ID No: **ACS202012**

Date : **09-03-2020**

Managing Director

Alpha CADD * Chennai-45 *

Certificate Of Completion

PRINCIPAL
MOHAMED SATHAK A.J.COLLEGE OF ENGINEERI
Mohamed Sathak Road (OMR), Siruseri, IT Park
Rajiv Gandhi Road (OMR), Siruseri, IT Park
Chennai-603 103.

AlphaCADD
Smart way to Success...

1, 1st Floor, Beteson's Complex
Ramasamy Street, West Tambaram
Chennai-600 045.

This is to certify that Mr./Ms. **MOHAMED UMAR.M**

has successfully completed the professional training program

on **STAAD PRO**

at **Mohamed Sathak AJ College of Engineering**

Period : from **03-12-2019** to **09-03-2020**

grade : **A** Student ID No: **ACS202014**

Alpha CADD Chennai-45

Date : **09-03-2020**

Managing Director

Certificate Of Completion

AlphaCADD
Smart way to Success...

1, 1st Floor, Beteson's Complex
Ramasamy Street, West Tambaram
Chennai-600 045.

PRINCIPAL
MOHAMED SATHAK A.J.COLLEGE OF ENGIN
34, Rajiv Gandhi Road (OMR), Siruseri, IT
Chennai-603 103

This is to certify that Mr./Ms. **MOHAMMED AMEEN.A**

has successfully completed the professional training program

on **STAAD PRO**

at **Mohamed Sathak AJ College of Engineering**

Period : from **03-12-2019** to **09-03-2020**

grade : **A** Student ID No: **ACS202015**

Date : **09-03-2020**

Managing Director

Alpha CADD Chennai-45

Certificate Of Completion

AlphaCADD
Smart way to Success...

1, 1st Floor, Beteson's Complex
Ramasamy Street, West Tambaram
Chennai-600 045.

PRINCIPAL
MOHAMED SATHAK A.J.COLLEGE OF ENGINEERIN
Rajiv Gandhi Road (OMR), Siruseri, IT Park
Chennai-603 103.

This is to certify that Mr./Ms. **MOHAMMED ISMAIL.S**

has successfully completed the professional training program

on **STAAD PRO**

at **Mohamed Sathak AJ College of Engineering**

Period : from **03-12-2019** to **09-03-2020**

grade : **A** Student ID No: **ACS202016**

Date : **09-03-2020**

Managing Director

AlphaCADD Chennai-45

Certificate Of Completion

PRINCIPAL
MOHAMED SATHAK A.J.COLLEGE OF ENGINEERING
No.1, Rajiv Gandhi Road (OMR), Siruseri, IT Park
Chennai-603 103.

AlphaCADD
Smart way to Success...

1, 1st Floor, Beteson's Complex
Ramasamy Street, West Tambaram
Chennai-600 045.

This is to certify that Mr./Ms. **SAMEEMUDEEN A**

has successfully completed the professional training program

on **STAAD PRO**

at **Mohamed Sathak AJ College of Engineering**

Period : from **03-12-2019** to **09-03-2020**

grade : **A** Student ID No: **ACS202017**

Date : **09-03-2020**

Managing Director

AlphaCADD Chennai-45

Certificate Of Completion

PRINCIPAL
MOHAMED SATHAK A.J.COLLEGE OF ENGINEERING
Rajiv Gandhi Road (OMR), Siruseri, IT Park
Chennai-603 103

AlphaCADD
Smart way to Success...

1, 1st Floor, Beteson's Complex
Ramasamy Street, West Tambaram
Chennai-600 045.

This is to certify that Mr./Ms. **SURENDER .M**

has successfully completed the professional training program

on **STAAD PRO**

at **Mohamed Sathak AJ College of Engineering**

Period : from **03-12-2019** to **09-03-2020**

grade : **A** Student ID No: **ACS202018**

Date : **09-03-2020**

Managing Director

AlphaCADD Chennai-45

Certificate Of Completion

PRINCIPAL
SYED SATHAK A.J.COLLEGE OF EN
54, Rajiv Gandhi Road (OMR), Siruseri,
Chennai-603 103.

AlphaCADD
Smart way to Success...

1, 1st Floor, Beteson's Complex
Ramasamy Street, West Tambaram
Chennai-600 045.

This is to certify that Mr./Ms. **SYED MOHAMMED USAID MOHIUDDIN**

has successfully completed the professional training program

on **STAAD PRO**

at **Mohamed Sathak AJ College of Engineering**

Period : from **03-12-2019** to **09-03-2020**

grade : **A** Student ID No: **ACS202019**

Date : **09-03-2020**

Managing Director

Alpha CADD Chennai-45

AlphaCADD×AlphaCADD×AlphaCADD

Certificate Of Completion

PRINCIPAL
MOHAMED SATHAK A.J.COLLEGE OF ENGINEERING
34, Rajiv Gandhi Road (OMR), Siruseri, IT Park
Chennai-603 103.

AlphaCADD
Smart way to Success...

1, 1st Floor, Beteson's Complex
Ramasamy Street, West Tambaram
Chennai-600 045.

This is to certify that Mr./Ms....**NAINA MOHAMED BASITH**.....

has successfully completed the professional training program

on.....**STAAD PRO**.....

at **Mohamed Sathak AJ College of Engineering**.....

Period : from..**03-12-2019**.. to **09-03-2020**

grade : ...**A**... Student ID No: .**ACS202020**.....

Alpha CADD * Chennai-45 *

Managing Director

Date : **09-03-2020**

MOHAMED SATHAK A J COLLEGE OF ENGINEERING
Sponsored by Mohamed Sathak Trust
(Approved by AICTE, New Delhi and Affiliated to Anna University, Chennai)
Siruseri IT Park, Egattur, Chennai 603 103

DEPARTMENT OF CSE & IT

From ,

The HoD

Dr.Dharavidaselvi

Department of CSE & IT

Mohamed Sathak A.J.College of Engineering,

Chennai – 603103.

To

The Principal,

Mohamed Sathak A.J.College of Engineering,

Chennai – 603103.

Respected Madam/Sir,

Sub: Permission for conducting ADD on course – reg.

With reference to the above cited subject, we have proposed to conduct ADD on courses for the students of CSE & IT department. The selected courses are useful to the students for learning the emerging technical fields.

Kindly provide the permission for the same.

Year/Sem	Title	Dates
III/V- CSE & IT	Robotic Process Automation (RPA)	22/07/2019 – 28/07/2019

Thanking you

Your's faithfully

Place : Chennai

Date:

PRINCIPAL
MOHAMED SATHAK A.J.COLLEGE OF ENGINEERING
34, Rajiv Gandhi Road (OMR), Siruseri, IT Park
Chennai-603 103.

MOHAMED SATHAK A J COLLEGE OF ENGINEERING
Sponsored by Mohamed Sathak Trust
(Approved by AICTE, New Delhi and Affiliated to Anna University, Chennai)
Siruseri IT Park, Egattur, Chennai 603 103

DEPARTMENT OF CSE & IT

From,

The HoD

Department of CSE & IT

Mohamed Sathak A.J.College of Engineering,

Chennai- 603103.

Respected Madam/Sir,

Sub: Assigning of faculty for VAC course curriculum design for the academic year 2019-2020 reg.

Ref: Letter of Requisition for the appointment of faculty for ADD on course curriculum design for the academic year 2019-2020 Dated:22/07/19 to 28/07/19.

The undersigned appreciates the department for proposing to conduct such kind of programme. As per your recommendation and referring to the above subject. I am pleased to nominate the following faculty members for ADD on course curriculum design.

The above listed faculty is hereby instructed to design the curriculum taking in to consideration the thrust areas of the respective field and ensure it should enhance the employability opportunities for the students.

Title	Name of the Faculty
Robotic Process Automation (RPA)	Mr.K.Vairaperumal AP/EEE

PRINCIPAL
MOHAMED SATHAK A.J.COLLEGE OF ENGINEERING
34, Rajiv Gandhi Road (OMR), Siruseri, IT Park
Chennai-603 103.

MOHAMED SATHAK A J COLLEGE OF ENGINEERING
Sponsored by Mohamed Sathak Trust
(Approved by AICTE, New Delhi and Affiliated to Anna University, Chennai)
Siruseri IT Park, Egattur, Chennai 603 103

DEPARTMENT OF EEE & ECE

Ref:01/MSAJCE/CSE& IT/ODD/2019-2020 Date:01/07/2019

CIRCULAR

Our department is organizing an "ADDON Course" on Robotic Process Automation during 22/07/2019 to 27/07/2019. The III Year CSE & IT Students register with Mr.K.Vairaperumal AP/EEE on or before 18/07/2019.

The session schedule is as follows

Timing: **9.00 AM to 3.30 PM**
Company Name: Automation Anywhere
Resource Person: Mr.K.Vairaperumal
Venue: RPA LAB

HoD/CSE & IT

COPY TO:
Dept. of CSE & IT
III Year CSE & IT

PRINCIPAL
MOHAMED SATHAK A.J.COLLEGE OF ENGINEERING
34, Rajiv Gandhi Road (OMR), Siruseri, IT Park
Chennai-603 103.

MOHAMED SATHAK A J COLLEGE OF ENGINEERING
Sponsored by Mohamed Sathak Trust
(Approved by AICTE, New Delhi and Affiliated to Anna University, Chennai)
Siruseri IT Park, Egattur, Chennai 603 103

DEPARTMENT OF CSE & IT

COURSE MODULE

Course Objectives:

1) To provide an overview of the automation anywhere enterprise platform architecture and components and explain in detail about the various features and functionalities of the AA working domain.
2) To provide in depth knowledge about the various components of AA software including development, runtime client and control room.
3) To Create bots using different types of recorders, Editor and Basics commands using automation anywhere platforms.
4) To apply bot creation methodologies for developing bots to solve any real world problem in IT Education and Banking Sectors.

MODULE-1

Introduction to Robotic Process Automation & Bot Creation

Introduction to RPA and use cases- Automation Anywhere Enterprises Platform-Advanced features and capabilities- Way to create bots-Conclusion.

MODULE-2

Web Control Room and Client

Introduction- Features Panel-Dashboard(Home,Bots,Devices, Audit, Workload,Insights)-Features Panel-Acitivity(View tasks in Progress and Scheduled Tasks)-Bots(View Bots uploaded and Credentials)-Devices(View Development and runtime clients and Device Pools)-Workload (Queues and SLA Calculatior)-Auditlog(View activities logged which are associated with web CR)-Administration(configure settings, users, roles, license and migration)-Demo of Exposed API's-Conclusion-Client introduction and conclusion.

MODULE-3

Bot Creator

Introduction-Recorders-Smart Recorders-Web recorders-Screen Recorders-Task Editor variables-command Library-Loop Command-Excel command-Database command-string operation command-XML command-Terminal Emulator command-PDF integration command-FTP command-PGP command- object cloning command-Error handling command-Manage windows control command-Workflow designer-Report designer-Best practices-Summary.

MODULE-4

Meta Bot and Bot Insight

Introduction-Metabot Designer-Megabot with AI sense-Bot Insight-transactional Analytics-Operational Analytics-Course key point.

PRINCIPAL
MOHAMED SATHAK A.J.COLLEGE OF ENGINEERING
34, Rajiv Gandhi Road (OMR), Siruseri, IT Park
Chennai-603 103.

MOHAMED SATHAK A J COLLEGE OF ENGINEERING
Sponsored by Mohamed Sathak Trust
(Approved by AICTE, New Delhi and Affiliated to Anna University, Chennai)
Siruseri IT Park, Egattur, Chennai 603 103

DEPARTMENT OF CSE & IT

MODULE-5

Practice and Assessment session

Bot creation using recorders(Smart, Web and Screen),Bot creation to invoke database automation, FTP and PGB command execution by bots. Bot development using object cloning command.

Course Outcomes:

. The students will be able to

CO1:Automate any sort of manual or repetitive human tasks by using the Automation anywhere tool.

CO2: Develop and deploy software bots which can performs automation task 24x7 without interruption.

CO3:Build an analytics boot that can be used in finance, stock market and banking sector.

PRINCIPAL
MOHAMED SATHAK A.J.COLLEGE OF ENGINEERING
34, Rajiv Gandhi Road (OMR), Siruseri, IT Park
Chennai-603 103.

MOHAMED SATHAK A J COLLEGE OF ENGINEERING
Sponsored by Mohamed Sathak Trust
(Approved by AICTE, New Delhi and Affiliated to Anna University, Chennai)
Siruseri IT Park, Egattur, Chennai 603 103

DEPARTMENT OF CSE & IT

CO PO Mapping

Course Outcome	PO1	PO2	PO3	PO4	PO5	PO6	PO7	PO8	PO9	PO10	PO11	PO12
The students will be able to CO1:Automate any sort of manual or repetitive human tasks by using the Automation anywhere tool.	3	3	3					2		2	3	3
CO2:The students will be able to develop and deploy software bots which can performs automation task 24x7 without interruption	2	2	2									
CO3:The students will be able to build an analytics boot that can be used in finance, stock market and banking Sector.	3	2	3									

PRINCIPAL
MOHAMED SATHAK A.J.COLLEGE OF ENGINEERING
84, Rajiv Gandhi Road (OMR), Siruseri, IT Park
Chennai-603 103.

MOHAMED SATHAK A J COLLEGE OF ENGINEERING
Sponsored by Mohamed Sathak Trust
(Approved by AICTE, New Delhi and Affiliated to Anna University, Chennai)
Siruseri IT Park, Egattur, Chennai 603 103

DEPARTMENT OF CSE & IT

Agenda and Topics

Day 1	Introduction	Training Introduction
		Introduction to Automation Anywhere
	Web Control Room	Introduction
		Features Panel
		Features Panel - Dashboard (Home, Bots, Devices, Audit, Workload, Insights)
		Features Panel – Activity (View Tasks in Progress and Scheduled Tasks)
		Features Panel – Bots (View Bots Uploaded and Credentials)
		Features Panel – Devices (View Development and Runtime Clients and Device Pools)
		Features Panel – Workload (Queues and SLA Calculator)
		Features Panel – Audit Log (View Activities Logged which are associated with Web CR)
		Features Panel – Administration (Configure Settings, Users, Roles, License and Migration)
		Demo of Exposed API's
		Conclusion
Day 2	Client	Introduction
		Conclusion
	Bot Creator	Introduction
		Recorders
		Recorders - Smart Recorder
		Recorders - Screen Recorder
		Recorders - Web Recorder
		Task Editor
		Variables
		Command Library
		Command Library – Loop Command

PRINCIPAL
MOHAMED SATHAK A.J.COLLEGE OF ENGINEERING
84, Rajiv Gandhi Road (OMR), Siruseri IT Park,
Chennai-603 103.

MOHAMED SATHAK A J COLLEGE OF ENGINEERING
Sponsored by Mohamed Sathak Trust
(Approved by AICTE, New Delhi and Affiliated to Anna University, Chennai)
Siruseri IT Park, Egattur, Chennai 603 103

DEPARTMENT OF CSE & IT

Day 3	Bot Creator	Command Library – Excel Command
		Command Library – Database Command
		Command Library – String Operation Command
		Command Library – XML Command
		Command Library – Terminal Emulator Command
		Command Library – PDF Integration Command
		Command Library – FTP Command
		Command Library – PGP Command
		Command Library – Object Cloning Command
		Command Library – Error Handling Command
Day 4	Bot Creator	Manage Windows Control Command
		Workflow Designer
		Report Designer
		Best Practices
		Summary
	MetaBot	Introduction
		MetaBot Designer
		MetaBot With AI Sense
	Bot Insight	Introduction
		Transactional Analytics
		Operational Analytics

PRINCIPAL
MOHAMED SATHAK A.J.COLLEGE OF ENGINEERING
34, Rajiv Gandhi Road (OMR), Siruseri, Kelambakkam
Chennai-603 103.

MOHAMED SATHAK A J COLLEGE OF ENGINEERING
Sponsored by Mohamed Sathak Trust
(Approved by AICTE, New Delhi and Affiliated to Anna University, Chennai)
Siruseri IT Park, Egattur, Chennai 603 103

DEPARTMENT OF CSE & IT

Day 5	Key Elements of Training	Training Need Assessment (TNA)
		Pre-assessment
		Pre-requisites
		Writing Objectives
		Writing Assessments
	Training Delivery	Types of Instructions
		Gagne's 9 Events of Instructions
		Selecting the Methods for Training
		Linking Blooms Taxonomy with Instructional Strategy
		Facilitation Skills
		Scheduling
	Activities	Showcasing Demonstrations
		Working on Exercises
		Energizers and Ice Breakers
		Recap/windup
	Evaluation	Types of Evaluation
		Stages of Evaluation
		When to Evaluate
		Evaluation and Support
	Tips for the Trainer	Tips for the Trainer
	Conclusion	Course Key Points
		Q&A

PRINCIPAL
MOHAMED SATHAK A.J.COLLEGE OF ENGINEERING
Rajiv Gandhi Road (OMR), Siruseri, IT Park
Chennai-603 103.

MOHAMED SATHAK A J COLLEGE OF ENGINEERING
Sponsored by Mohamed Sathak Trust
(Approved by AICTE, New Delhi and Affiliated to Anna University, Chennai)
Siruseri IT Park, Egattur, Chennai 603 103

DEPARTMENT OF CSE & IT

Assessment

1) RPA with thinking and decision making capabilities are known as _____.

- A. internet process automation
- B.intelligent processor automation
- C.intelligent process automation
- D.intelligent process automatic

2) Intelligence Process Automation is a collection of next generation tools and business process improvements that help workers by eliminating routine and repetitive tasks.

- A. True
- B.False

3) Some of the key attributes which favor Assisted RPA are _____.

- A. Unclear inputs
- B.Social Context
- C.Task distribution
- D.All of the above

4) Processing of customer complaints can be automated using RPA.

- A. True
- B.False

5) Re-engineering the entire underlying process is part of _____

- A. BPM
- B.RPA
- C.Both A and B
- D.None of the above

PRINCIPAL
MOHAMED SATHAK A.J.COLLEGE OF ENGINEERING
34, Rajiv Gandhi Road (OMR), Siruseri, IT Park
Chennai-603 103.

6) RPA is not suitable for processes that _____.

- A. are consistent
- B.are repetitive
- C.require constant human intervention
- D.Can't say

7) RPA enables _____.

- A. Cost based reduction
- B.Reduces delivery risk
- C.Easy integration
- D.All of the above

8) RPA can handle operations such as _____.

- A. writing emails
- B.claims processing
- C.document classification
- D.All of the above

9) A robot can accumulate knowledge of procedures over time.

- A. True
- B.False

10) _____ factors make up being strong determinants of scalability and reliability in RPA process layered approach.

- A. Abstract
- B.Categorization
- C.Re-usability
- D.None of the above

11) The business benefits of RPA includes _____.

- A. Flexibility and Scalability
- B.Improved Accuracy
- C.Improved Employee Morale
- D.All of the above

PRINCIPAL
MOHAMED SATHAK A.J.COLLEGE OF ENGINEERING
34, Rajiv Gandhi Road (OMR), Siruseri, IT Park
Chennai-603 103.

12) In RPA Greater resilience is achieved through _____.

- A. Layered Configuration
- B.Functional approach
- C.Object-oriented approach
- D.All of the above

13) All the RPA tools provide both front and back office automation.

- A. Yes
- B.No
- C.May be
- D.Can't say

14) CRM systems can be streamlined using _____ tools.

- A. BPM
- B.RPA
- C.Both A and B
- D.None of the above

PRINCIPAL
MOHAMED SATHAK A.J.COLLEGE OF ENGINEERING
34, Rajiv Gandhi Road (OMR), Siruseri, IT Park
Chennai-603 103.

MOHAMED SATHAK A J COLLEGE OF ENGINEERING
Sponsored by Mohamed Sathak Trust
(Approved by AICTE, New Delhi and Affiliated to Anna University, Chennai)
Siruseri IT Park, Egattur, Chennai 603 103

DEPARTMENT OF CSE & IT
EVALUVATION SHEET

1) RPA with thinking and decision making capabilities are known as _____.

- (•) A. internet process automation
- B.intelligent processor automation
- C.intelligent process automation
- D.intelligent process automatic

2) Intelligence Process Automation is a collection of next generation tools and business process improvements that help workers by eliminating routine and repetitive tasks.

- (•) A. True
- B.False

3) Some of the key attributes which favor Assisted RPA are _____.

- A. Unclear inputs
- (•) B.Social Context
- C.Task distribution
- D.All of the above

4) Processing of customer complaints can be automated using RPA.

- A. True
- B.False

5) Re-engineering the entire underlying process is part of _____

- A. BPM
- (•) B.RPA
- C.Both A and B
- D.None of the above

6) RPA is not suitable for processes that _____.

- A. are consistent
- B.are repetitive
- (•) C.require constant human intervention
- D.Can't say

PRINCIPAL
MOHAMED SATHAK A.J.COLLEGE OF ENGINEERING
33, Rajiv Gandhi Road (OMR), Siruseri I.T. Park
Chennai-600 103.

DEPARTMENT OF CSE & IT

7) RPA enables _____.

- A. Cost based reduction
- B.Reduces delivery risk
- C.Easy integration
- D.All of the above

8) RPA can handle operations such as _____.

- A. writing emails
- B.claims processing
- C.document classification
- D.All of the above

9) A robot can accumulate knowledge of procedures over time.

- A. True
- B.False

10) _____ factors make up being strong determinants of scalability and reliability in RPA process layered approach.

- A. Abstract
- B.Categorization
- C.Re-usability
- D.None of the above

11) The business benefits of RPA includes _____.

- A. Flexibility and Scalability
- B.Improved Accuracy
- C.Improved Employee Morale
- D.All of the above

PRINCIPAL
MOHAMED SATHAK A.J.COLLEGE OF ENGINEERING
34, Rajiv Gandhi Road (OMR), Siruseri, IT Park
Chennai-603 103.

12) In RPA Greater resilience is achieved through _____.

- A. Layered Configuration
- B.Functional approach
- C.Object-oriented approach
- D.All of the above

DEPARTMENT OF CSE & IT

13) All the RPA tools provide both front and back office automation.

- [x] A. Yes
- [ ] B.No
- [ ] C.May be
- [ ] D.Can't say

14) CRM systems can be streamlined using _____ tools.

- [ ] A. BPM
- [x] B.RPA
- [ ] C.Both A and B
- [ ] D.None of the above

11/14

PRINCIPAL
MOHAMED SATHAK A.J.COLLEGE OF ENGINEERING
Jai Rajiv Gandhi Road (OMR) Siruseri, IT Park
Chennai-603 103.

MOHAMED SATHAK A J COLLEGE OF ENGINEERING
Sponsored by Mohamed Sathak Trust
(Approved by AICTE, New Delhi and Affiliated to Anna University, Chennai)
Siruseri IT Park, Egattur, Chennai 603 103

DEPARTMENT OF CSE & IT

S.No	Register No.	CSE -Name of the Students	Status of Qualifying
1	311817104001	Aayisha M	Yes
2	311817104003	Asif Fayaz.S	Yes
3	311817104009	Jai Balaji.V	Yes
4	311817104016	Mohamed Nazeer.A	Yes
5	311817104021	Najeeha Banu.A	Yes
6	311817104022	Naveen Kumar.S	Yes
7	311817104023	Nithyadarshni S	Yes
8	311817104024	Rahamathullah K	Yes
9	311817104026	Ramesh S	Yes
10	311817104010	Jasir Hussain.S	Yes
11	311817104028	Santhosh Raja L	Yes
12	311817104027	Sabeer Ahamed S	Yes
13	311817104030	Shahid Yaaser	Yes
14	311817104019	Mohamed Suhail.M	Yes
15	311817104034	Venkatesan S	Yes
16	311817104029	Selciya J	Yes
17	311817104004	Dinesh D	Yes
18	311817104015	Mohamed Furose H	Yes
19	311817104031	Soundarya M	Yes
20	311817104017	Mohamed Riyaz M A	Yes
21	311817104025	Rahuman Gani	Yes
22	311817104018	Mohamed Sajed S	Yes
23	311817104020	Mohammed Sulaiman B	Yes
24	311817104012	Kesavan H	Yes
25	311817104005	Fahima S	Yes
26	311817104032	Syed Sahir Ahmed K	Yes
27	311817104013	Manoj K	Yes

PRINCIPAL
MOHAMED SATHAK A.J.COLLEGE OF ENGINEERING
34, Rajiv Gandhi Road (OMR), Siruseri, IT Park
Chennai-603 103.

S.No	Register No.	IT-Name of the Students	Status of Qualifying
1	311817205703	Jothika M	Yes
2	311817205005	Prakash	Yes
3	311817205702	Bhuvana Tharshini	Yes
4	311817205704	Vinotha K	Yes
5	311817205701	Bhavani K	Yes
6	311817205004	Mohamed Hanaz N	Yes
7	311817205006	Ranjith T	Yes

MOHAMED SATHAK A J COLLEGE OF ENGINEERING
Sponsored by Mohamed Sathak Trust
(Approved by AICTE, New Delhi and Affiliated to Anna University, Chennai)
Siruseri IT Park, Egattur, Chennai 603 103

ROBOTIC PROCESS AUTOMATION ATTENDACE- (2019-2020)

S.no	Reg. No. of the Student	Student Name	7/22/2019	7/23/2019	7/24/2019	7/25/2019	7/26/2019	7/27/2019	Total	% of Attendance
1	311817104001	Aayisha M	P	P	P	P	P	P	6	100.00%
2	311817104003	Asif Fayaz.S	P	P	P	P	P	P	6	100.00%
3	311817104009	Jai Balaji.V	P	P	P	P	P	P	6	100.00%
4	311817104016	Mohamed Nazeer.A	P	P	P	P	P	P	6	100.00%
5	311817104021	Najeeha Banu.A	P	P	P	P	P	P	6	100.00%
6	311817104022	Naveen Kumar.S	P	P	P	P	P	P	6	100.00%
7	311817104023	Nithyadarshni S	P	P	P	P	P	P	6	100.00%
8	311817104024	Rahamathullah K	P	P	P	P	P	P	6	100.00%
9	311817104026	Ramesh S	P	P	P	P	P	P	6	100.00%
10	311817104010	Jasir Hussain.S	P	P	P	P	P	P	6	100.00%
11	311817104028	Santhosh Raja L	P	P	P	P	P	P	6	100.00%
12	311817104027	Sabeer Ahamed S	P	P	P	P	P	P	6	100.00%
13	311817104030	Shahid Yaaser	P	P	P	P	P	P	6	100.00%
14	311817104019	Mohamed Suhail.M	P	P	P	P	P	P	6	100.00%
15	311817104034	Venkatesan S	P	P	P	P	P	P	6	100.00%
16	311817104029	Selciya J	P	P	P	P	P	P	6	100.00%
17	311817104004	Dinesh D	P	P	P	P	P	P	6	100.00%
18	311817104015	Mohamed Furose H	P	P	P	P	P	P	6	100.00%
19	311817104031	Soundarya M	P	P	P	P	P	P	6	100.00%
20	311817104017	Mohamed Riyaz M A	P	P	P	P	P	P	6	100.00%
21	311817104025	Rahuman Gani	P	P	P	P	P	P	6	100.00%
22	311817104018	Mohamed Sajed S	P	P	P	P	P	P	6	100.00%
23	311817104020	Mohammed Sulaiman B	P	P	P	P	P	P	6	100.00%
24	311817104012	Kesavan H	P	P	P	P	P	P	6	100.00%
25	311817104005	Fahima S	P	P	P	P	P	P	6	100.00%
26	311817104032	Syed Sahir Ahmed K	P	P	P	P	P	P	6	100.00%
27	311817104013	Manoj K	P	P	P	P	P	P	6	100.00%

AUTOMATION ANYWHERE
Go be great.

ASIF FAYAZ.S

AUTOMATION ANYWHERE UNIVERSITY CERTIFIED **ESSENTIALS** RPA PROFESSIONAL

PRINCIPAL
DR. SAMUEL MATHAI A.J.COLLEGE OF ENGINEERING
No. 84, Rajiv Gandhi Salai (OMR), Siruseri, IT Park
Chennai-603 103.

K Holmgren
Chief Officer, Future Workforce

ROBOTIC PROCESS AUTOMATION PROFESSIONAL V10.0

AAADVC-56656101

AUTOMATION ANYWHERE
Go be great.

AAYISHA M

AUTOMATION ANYWHERE UNIVERSITY CERTIFIED **ESSENTIALS** RPA PROFESSIONAL

PRINCIPAL
MOHAMED SATHAK A.J.COLLEGE OF ENGINEERING
34, Rajiv Gandhi Road (OMR), Siruseri, IT Park
Chennai-603 103.

K Holmgren
Chief Officer, Future Workforce

ROBOTIC PROCESS AUTOMATION PROFESSIONAL V10.0

- AAADVC-56656103

AUTOMATION ANYWHERE
Go be great.

MAHAMOOD NAINA

AUTOMATION ANYWHERE UNIVERSITY CERTIFIED **ESSENTIALS** RPA PROFESSIONAL

PRINCIPAL
MOHAMED SATHAK A.J.COLLEGE OF ENGINEERING
34, Rajiv Gandhi Road (OMR), Siruseri, IT Park
Chennai-603 103.

K Holmgren
Chief Officer, Future Workforce

ROBOTIC PROCESS AUTOMATION PROFESSIONAL V10.0

AAADVC-59482823

AUTOMATION ANYWHERE
Go be great.

RANJITH T

AUTOMATION ANYWHERE UNIVERSITY CERTIFIED **ESSENTIALS** RPA PROFESSIONAL

PRINCIPAL
MOHAMED SATHAK A.J.COLLEGE OF ENGINEERING
Dr. Rajiv Gandhi Road (OMR), Siruseri, IT Park
Chennai-603 103.

K Holmgren
Chief Officer, Future Workforce

ROBOTIC PROCESS AUTOMATION PROFESSIONAL V10.0

AAADVC-59374306

AUTOMATION ANYWHERE
Go be great.

MOHAMED HANAZ.N

AUTOMATION ANYWHERE UNIVERSITY CERTIFIED **ESSENTIALS** RPA PROFESSIONAL

PRINCIPAL
MOHAMED SATHAK A.J.COLLEGE OF ENGINEERING
34, Rajiv Gandhi Road (OMR), Siruseri, IT Park
Chennai-603 103.

K Holmgren
Chief Officer, Future Workforce

ROBOTIC PROCESS AUTOMATION PROFESSIONAL V10.0

AAESS-15141253

AUTOMATION ANYWHERE
Go be great.

BHAVANI K

AUTOMATION ANYWHERE UNIVERSITY CERTIFIED **ESSENTIALS** RPA PROFESSIONAL

PRINCIPAL
MOHAMED SATHAK A.J.COLLEGE OF ENGINEERING
34, Rajiv Gandhi Road (OMR), Siruseri, IT Park
Chennai-603 103.

Chief Officer, Future Workforce

ROBOTIC PROCESS AUTOMATION PROFESSIONAL V10.0

AAESS-15155562

AUTOMATION ANYWHERE
Go be great.

VINOTHA K

AUTOMATION ANYWHERE UNIVERSITY CERTIFIED **ESSENTIALS** RPA PROFESSIONAL

PRINCIPAL
MOHAMED SATHAK A.J.COLLEGE OF ENGINEERING
34, Rajiv Gandhi Road (OMR), Siruseri, IT Park
Chennai-603 103

K Holmgren

Chief Officer, Future Workforce

ROBOTIC PROCESS AUTOMATION PROFESSIONAL V10.0

AAADVC-59374394

AUTOMATION ANYWHERE
Go be great.

BHUVANATHARSHINI A

AUTOMATION ANYWHERE UNIVERSITY CERTIFIED **ESSENTIALS** RPA PROFESSIONAL

PRINCIPAL
MOHAMED SATHAK A.J.COLLEGE OF ENGINEERING
34, Rajiv Gandhi Road (OMR), Siruseri, IT Park
Chennai-603 103.

Chief Officer, Future Workforce

ROBOTIC PROCESS AUTOMATION PROFESSIONAL V10.0

AAADVC-59374313

AUTOMATION ANYWHERE
Go be great.

PRAKASH R

AUTOMATION ANYWHERE UNIVERSITY CERTIFIED **ESSENTIALS** RPA PROFESSIONAL

PRINCIPAL
MOHAMED SATHAK A.J.COLLEGE OF ENGINEERING
34, Rajiv Gandhi Road (OMR), Siruseri, IT Park
Chennai-600 103.

Chief Officer, Future Workforce

ROBOTIC PROCESS AUTOMATION PROFESSIONAL V10.0

· AADVC-59374302

AUTOMATION ANYWHERE
Go be great.

JOTHIKA M

AUTOMATION ANYWHERE UNIVERSITY CERTIFIED **ESSENTIALS** RPA PROFESSIONAL

PRINCIPAL
MOHAMED SATHAK A.J. COLLEGE OF ENGINEERING
34, Rajiv Gandhi Road (OMR), Siruseri, IT Park
Chennai-603 103.

K Holmgren

Chief Officer, Future Workforce

ROBOTIC PROCESS AUTOMATION PROFESSIONAL V10.0

AAADVC-56770688

AUTOMATION ANYWHERE
Go be great.

MANOJ K

AUTOMATION ANYWHERE UNIVERSITY CERTIFIED **ESSENTIALS** RPA PROFESSIONAL

PRINCIPAL
MOHAMED SATHAK A.J.COLLEGE OF ENGINEERING
34, Rajiv Gandhi Road (OMR), Siruseri, IT Park
Chennai-603 103.

K Holmgren

Chief Officer, Future Workforce

ROBOTIC PROCESS AUTOMATION PROFESSIONAL V10.0

AAADVC-59374320

AUTOMATION ANYWHERE
Go be great.

SYED SAHIR AHMED.K

AUTOMATION ANYWHERE UNIVERSITY CERTIFIED **ESSENTIALS** RPA PROFESSIONAL

PRINCIPAL
MOHAMED SATHAK A.J.COLLEGE OF ENGINEERING
34, Rajiv Gandhi Road (OMR), Siruseri, IT Park
Chennai-603 103

K Holmgren
Chief Officer, Future Workforce

ROBOTIC PROCESS AUTOMATION PROFESSIONAL V10.0

AAADVC-59374349

AUTOMATION ANYWHERE
Go be great.

FAHIMA SIKKANDER

AUTOMATION ANYWHERE UNIVERSITY CERTIFIED **ESSENTIALS** RPA PROFESSIONAL

PRINCIPAL
MOHAMED SATHAK A.J.COLLEGE OF ENGINEERING
34, Rajiv Gandhi Road (OMR), Siruseri, IT Park
Chennai-603 103.

Chief Officer, Future Workforce

ROBOTIC PROCESS AUTOMATION PROFESSIONAL V10.0

AAADVC-59374351

AUTOMATION ANYWHERE
Go be great.

KESAVAN H

AUTOMATION ANYWHERE UNIVERSITY CERTIFIED **ESSENTIALS** RPA PROFESSIONAL

PRINCIPAL
MOHAMED SATHAK A.J.COLLEGE OF ENGINEERING
34, Rajiv Gandhi Road (OMR), Siruseri, IT Park
Chennai-603 103.

K Holmgren
Chief Officer, Future Workforce

ROBOTIC PROCESS AUTOMATION PROFESSIONAL V10.0

AAADVC-59374350

AUTOMATION ANYWHERE
Go be great.

MOHAMMED SULAIMAN B

AUTOMATION ANYWHERE UNIVERSITY CERTIFIED **ESSENTIALS** RPA PROFESSIONAL

PRINCIPAL
MOHAMED SATHAK A.J.COLLEGE OF ENGINEERING
34, Rajiv Gandhi Road (OMR), Siruseri, IT Park
Chennai-603 103.

K Holmgren
Chief Officer, Future Workforce

ROBOTIC PROCESS AUTOMATION PROFESSIONAL V10.0

AAESS-15141247

AUTOMATION ANYWHERE
Go be great.

MOHAMED SAJED S

AUTOMATION ANYWHERE UNIVERSITY CERTIFIED **ESSENTIALS** RPA PROFESSIONAL

PRINCIPAL
MOHAMED SATHAK A.J.COLLEGE OF ENGINEERING
34, Rajiv Gandhi Road (OMR), Siruseri, IT Park
Chennai-603 103.

Chief Officer, Future Workforce

ROBOTIC PROCESS AUTOMATION PROFESSIONAL V10.0

AAADVC-59374259

AUTOMATION ANYWHERE
Go be great.

RAHUMANGANI R

AUTOMATION ANYWHERE UNIVERSITY CERTIFIED **ESSENTIALS** RPA PROFESSIONAL

MOHAMED SATHAK A.J. COLLEGE OF ENGINEERING CHENNAI

PRINCIPAL
MOHAMED SATHAK A.J.COLLEGE OF ENGINEERING
34, Rajiv Gandhi Road (OMR), Siruseri, IT Park
Chennai-603 103.

Chief Officer, Future Workforce

ROBOTIC PROCESS AUTOMATION PROFESSIONAL V10.0

AAADVC-59374285

AUTOMATION ANYWHERE
Go be great.

MOHAMED RIYAZ .M.A

AUTOMATION ANYWHERE UNIVERSITY CERTIFIED **ESSENTIALS** RPA PROFESSIONAL

MOHAMED SATHAK A.J. COLLEGE OF ENGINEERING
CHENNAI - 603 103

PRINCIPAL
MOHAMED SATHAK A.J.COLLEGE OF ENGINEERING
34, Rajiv Gandhi Road (OMR), Siruseri, IT Park
Chennai-603 103.

ROBOTIC PROCESS AUTOMATION PROFESSIONAL V10.0

AAADVC-59374299

Chief Officer, Future Workforce

AUTOMATION ANYWHERE UNIVERSITY

AUTOMATION ANYWHERE
Go be great.

SOUNDARYA M

AUTOMATION ANYWHERE UNIVERSITY CERTIFIED **ESSENTIALS** RPA PROFESSIONAL

PRINCIPAL
MOHAMED SATHAK A.J.COLLEGE OF ENGINEERING
34, Rajiv Gandhi Road (OMR), Siruseri, IT Park
Chennai-603 103.

Chief Officer, Future Workforce

ROBOTIC PROCESS AUTOMATION PROFESSIONAL V10.0

AAADVC-59374444

AUTOMATION ANYWHERE
Go be great.

MOHAMED FUROSE H

AUTOMATION ANYWHERE UNIVERSITY CERTIFIED **ESSENTIALS** RPA PROFESSIONAL

PRINCIPAL
MOHAMED SATHAK A.J.COLLEGE OF ENGINEERING
34, Rajiv Gandhi Road (OMR), Siruseri, IT Park
Chennai-603 103.

K Holmgren
Chief Officer, Future Workforce

ROBOTIC PROCESS AUTOMATION PROFESSIONAL V10.0

AAADVC-59374220

AUTOMATION ANYWHERE
Go be great.

DINESH D

AUTOMATION ANYWHERE UNIVERSITY CERTIFIED **ESSENTIALS** RPA PROFESSIONAL

ROBOTIC PROCESS AUTOMATION PROFESSIONAL V10.0

AAADVC-59374293

MOHAMED SATHAK A.J. COLLEGE CHENNAI - 603 103

PRINCIPAL
MOHAMED SATHAK A.J.COLLEGE OF ENGINEERING
34, Rajiv Gandhi Road (OMR), Siruseri, IT Park
Chennai-603 103.

K Holmgren

Chief Officer, Future Workforce

AUTOMATION ANYWHERE

AUTOMATION ANYWHERE
Go be great.

SELCIYA J

AUTOMATION ANYWHERE UNIVERSITY CERTIFIED **ESSENTIALS** RPA PROFESSIONAL

PRINCIPAL
MOHAMED SATHAK A.J.COLLEGE OF ENGINEERING
34, Rajiv Gandhi Road (OMR), Siruseri, IT Park
Chennai-603 103.

K Holmgren
Chief Officer, Future Workforce

ROBOTIC PROCESS AUTOMATION PROFESSIONAL V10.0

AAADVC-59374310

AUTOMATION ANYWHERE
Go be great.

VENKATESAN S

AUTOMATION ANYWHERE UNIVERSITY CERTIFIED **ESSENTIALS** RPA PROFESSIONAL

ROBOTIC PROCESS AUTOMATION PROFESSIONAL V10.0

AAADVC-59374309

PRINCIPAL
MOHAMED SATHAK A.J.COLLEGE OF ENGINEERING
34, Rajiv Gandhi Road (OMR), Siruseri, IT Park
Chennai-603 103.

K Holmgren

Chief Officer, Future Workforce

AUTOMATION ANYWHERE
Go be great.

MOHAMED SUHAIL M

AUTOMATION ANYWHERE UNIVERSITY CERTIFIED **ESSENTIALS** RPA PROFESSIONAL

PRINCIPAL
MOHAMED SATHAK A.J.COLLEGE OF ENGINEERING
34, Rajiv Gandhi Road (OMR), Siruseri, IT Park
Chennai-603 103.

Chief Officer, Future Workforce

ROBOTIC PROCESS AUTOMATION PROFESSIONAL V10.0

AAADVC-59374264

AUTOMATION ANYWHERE
Go be great.

SHAHID YAASER J

AUTOMATION ANYWHERE UNIVERSITY CERTIFIED **ESSENTIALS** RPA PROFESSIONAL

PRINCIPAL
MOHAMED SATHAK A.J.COLLEGE OF ENGINEERING
34, Rajiv Gandhi Road (OMR), Siruseri, IT Park
Chennai-603 103

Chief Officer, Future Workforce

ROBOTIC PROCESS AUTOMATION PROFESSIONAL V10.0

AAESS-15141243

AUTOMATION ANYWHERE
Go be great.

Sabeer Ahamed S

AUTOMATION ANYWHERE UNIVERSITY CERTIFIED **ESSENTIALS** RPA PROFESSIONAL

PRINCIPAL
MOHAMED SATHAK A.J.COLLEGE OF ENGINEERING
34, Rajiv Gandhi Road (OMR), Siruseri, IT Park
Chennai-603 103.

K Holmgren
Chief Officer, Future Workforce

ROBOTIC PROCESS AUTOMATION PROFESSIONAL V10.0

AAADVC-59374325

AUTOMATION ANYWHERE
Go be great.

SANTHOSHRAJA L

AUTOMATION ANYWHERE UNIVERSITY CERTIFIED **ESSENTIALS** RPA PROFESSIONAL

PRINCIPAL
MOHAMED SATHAK A.J.COLLEGE OF ENGINEERING
34, Rajiv Gandhi Road (OMR), Siruseri, IT Park
Chennai-603 103.

Chief Officer, Future Workforce

ROBOTIC PROCESS AUTOMATION PROFESSIONAL V10.0

AAADVC-56771342

AUTOMATION ANYWHERE
Go be great.

JASIR HUSSAIN.S

AUTOMATION ANYWHERE UNIVERSITY CERTIFIED **ESSENTIALS** RPA PROFESSIONAL

PRINCIPAL
MOHAMED SATHAK A.J COLLEGE OF ENGINEERING
34, Rajiv Gandhi Road (OMR), Siruseri, IT Park
Chennai-603 103.

Chief Officer, Future Workforce

ROBOTIC PROCESS AUTOMATION PROFESSIONAL V10.0

AAADVC-56771332

AUTOMATION ANYWHERE
Go be great.

RAMESH S

AUTOMATION ANYWHERE UNIVERSITY CERTIFIED **ESSENTIALS** RPA PROFESSIONAL

PRINCIPAL
MOHAMED SATHAK A.J. COLLEGE OF ENGINEERING
34, Rajiv Gandhi Road (OMR), Siruseri, IT Park
Chennai-603 103.

Chief Officer, Future Workforce

ROBOTIC PROCESS AUTOMATION PROFESSIONAL V10.0

AAADVC-56655675

AUTOMATION ANYWHERE
Go be great.

RAHAMATHULLAH K

AUTOMATION ANYWHERE UNIVERSITY CERTIFIED **ESSENTIALS** RPA PROFESSIONAL

PRINCIPAL
MOHAMED SATHAK A.J.COLLEGE OF ENGINEERING
34, Rajiv Gandhi Road (OMR), Siruseri, IT Park
Chennai-603 103.

Chief Officer, Future Workforce

ROBOTIC PROCESS AUTOMATION PROFESSIONAL V10.0

AADVC-56655842

AUTOMATION ANYWHERE
Go be great.

NITHYADARSHNI S

AUTOMATION ANYWHERE UNIVERSITY CERTIFIED **ESSENTIALS** RPA PROFESSIONAL

PRINCIPAL
MOHAMED SATHAK A.J.COLLEGE OF ENGINEERING
34, Rajiv Gandhi Road (OMR), Siruseri, IT Park
Chennai-603 103.

K Holmgren
Chief Officer, Future Workforce

ROBOTIC PROCESS AUTOMATION PROFESSIONAL V10.0

AAADVC-56655849

AUTOMATION
ANYWHERE
Go be great.

NAVEEN KUMAR.S

AUTOMATION ANYWHERE UNIVERSITY CERTIFIED **ESSENTIALS** RPA PROFESSIONAL

PRINCIPAL
MOHAMED SATHAK A.J. COLLEGE OF ENGINEERING
34, Rajiv Gandhi Road (OMR), Siruseri, IT Park
Chennai-603 103.

Chief Officer, Future Workforce

ROBOTIC PROCESS AUTOMATION PROFESSIONAL V10.0

AAADVC-56655807

AUTOMATION ANYWHERE

Go be great.

MOHAMED NAZEER.A

AUTOMATION ANYWHERE UNIVERSITY CERTIFIED **ESSENTIALS** RPA PROFESSIONAL

PRINCIPAL
MOHAMED SATHAK A.J.COLLEGE OF ENGINEERING
Rajiv Gandhi Road (OMR), Siruseri, IT Park
Chennai-603 103.

Chief Officer, Future Workforce

ROBOTIC PROCESS AUTOMATION PROFESSIONAL V10.0

AAADVC-56655737

AUTOMATION ANYWHERE
Go be great.

NAJEEHA BANU.A

AUTOMATION ANYWHERE UNIVERSITY CERTIFIED **ESSENTIALS** RPA PROFESSIONAL

PRINCIPAL
SATHAKAL COLLEGE OF ENGINEERING
Road (OMR), Siruseri, IT Park

Chief Officer, Future Workforce

ROBOTIC PROCESS AUTOMATION PROFESSIONAL V10.0

AAADVC-56655639

AUTOMATION ANYWHERE
Go be great.

JAI BALAJI.V

AUTOMATION ANYWHERE UNIVERSITY CERTIFIED **ESSENTIALS** RPA PROFESSIONAL

PRINCIPAL
[illegible] SATHAKA.J COLLEGE OF ENGINEERING
[illegible] Rajiv Gandhi Road (OMR), Siruseri, IT Park
Chennai-603 103.

K Holmgren
Chief Officer, Future Workforce

ROBOTIC PROCESS AUTOMATION PROFESSIONAL V10.0

AAADVC-56655718

MOHAMED SATHAK

A J COLLEGE OF ENGINEERING

Approved by AICTE, New Delhi, Affiliated to Anna University

34, Rajiv Gandhi Salai (OMR), Siruseri IT Park, Siruseri, Chennai - 603103

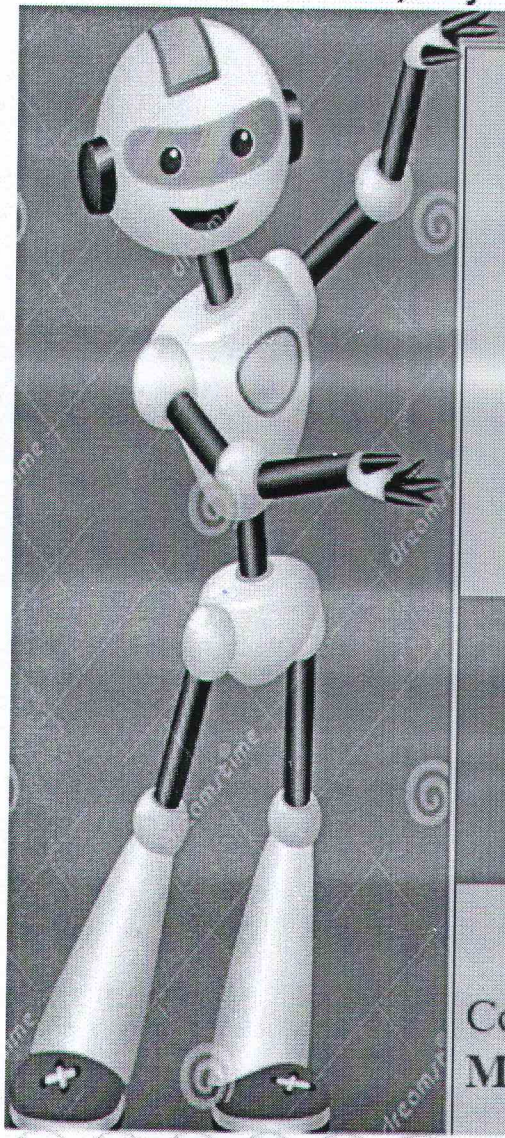

Department of

Electrical and Electronics Engineering

And

Electronics and Communication Engineering

Organize

A Course

on

MOHAMED SATHAK A.J. COLLEGE OF ENGINEERING
EGATTUR 603 103.
KANCHIPURAM DT

ROBOTIC PROCESS AUTOMATION (RPA)

22.07.2019 – 28.07.2019

Co-Ordinator:

Mr. K. Vairaperumal, AP/EEE

+91-9940004500/044-27470024 msajce.office@gmail.com www.msajce-edu.in

MOHAMED SATHAK A J COLLEGE OF ENGINEERING
Sponsored by Mohamed Sathak Trust
(Approved by AICTE, New Delhi and Affiliated to Anna University, Chennai)
Siruseri IT Park, Egattur, Chennai 603 103

DEPARTMENT OF EEE &ECE

From ,

Dr.Murugan

Dr.Dharavidaselvi

Department of EEE & ECE

Mohamed Sathak A.J.College of Engineering,

Chennai – 603103.

To

The Principal,

Mohamed Sathak A.J.College of Engineering,

Chennai – 603103.

PRINCIPAL
MOHAMED SATHAK A.J. COLLEGE OF ENGINEERING
EGATTUR 603 103.
KANCHIPURAM DT

Respected Madam/Sir,

Sub: Permission for conducting ADD on course – reg.

With reference to the above cited subject, we have proposed to conduct ADD on courses for the students of EEE& ECE department. The selected courses are useful to the students for learning the emerging technical fields.

Kindly provide the permission for the same.

Year/Sem	Title	Dates
III/V- EEE & ECE	Robotic Process Automation (RPA)	22/07/2019 – 28/07/2019

Thanking you

Your's faithfully

Place : Chennai

Date:

MOHAMED SATHAK A.J. COLLEGE OF ENGINEERING CHENNAI - 603 103.

Principal

MOHAMED SATHAK A J COLLEGE OF ENGINEERING
Sponsored by Mohamed Sathak Trust
(Approved by AICTE, New Delhi and Affiliated to Anna University, Chennai)
Siruseri IT Park, Egattur, Chennai 603 103

DEPARTMENT OF EEE & ECE

From,

Dr.R.Murugan
Department of EEE & ECE
Mohamed Sathak A.J.College of Engineering,
Chennai- 603103.

PRINCIPAL
MOHAMED SATHAK A.J. COLLEGE OF ENGINEERING
EGATTUR 603 103.
KANCHIPURAM DT

Respected Madam/Sir,

Sub: Assigning of faculty for VAC course curriculum design for the academic year 2019-2020 reg.

Ref: Letter of Requisition for the appointment of faculty for ADD on course curriculum design for the academic year 2019-2020 Dated:22/07/19 to 28/07/19.

The undersigned appreciates the department for proposing to conduct such kind of programme. As per your recommendation and referring to the above subject. I am pleased to nominate the following faculty members for ADD on course curriculum design.

The above listed faculty is hereby instructed to design the curriculum taking in to consideration the thrust areas of the respective field and ensure it should enhance the employability opportunities for the students.

Title	Name of the Faculty
Robotic Process Automation (RPA)	Mr.K.Vairaperumal AP/EEE

MOHAMED SATHAK A.J. COLLEGE OF ENGINEERING - CHENNAI - 603 103

Principal

MOHAMED SATHAK A J COLLEGE OF ENGINEERING
Sponsored by Mohamed Sathak Trust
(Approved by AICTE, New Delhi and Affiliated to Anna University, Chennai)
Siruseri IT Park, Egattur, Chennai 603 103

DEPARTMENT OF EEE & ECE

Ref:01/MSAJCE/EEE/ODD/2019-2020

Date:01/07/2019

CIRCULAR

Our department is organizing an "ADDON Course" on Robotic Process Automation during 22/07/2019 to 27/07/2019. The III Year EEE & ECE Students register with Mr.K.Vairaperumal AP/EEE on or before 18/07/2019.

The session schedule is as follows

Timing: **9.00 AM to 3.30 PM**

Company Name: Automation Anywhere

Resource Person: K. VAIRAPERUMAL

Venue: RPA LAB

HoD/EEE &ECE

MOHAMED SATHAK A.J. COLLEGE OF ENGINEERING - CHENNAI - 603 103.

MOHAMED SATHAK A.J. COLLEGE OF ENGINEERING
EGATTUR 603 103.
KANCHIPURAM DT

COPY TO:
Dept. of EEE & ECE
III Year EEE & ECE

MOHAMED SATHAK A J COLLEGE OF ENGINEERING
Sponsored by Mohamed Sathak Trust
(Approved by AICTE, New Delhi and Affiliated to Anna University, Chennai)
Siruseri IT Park, Egattur, Chennai 603 103

DEPARTMENT OF EEE & ECE

COURSE MODULE

Course Objectives:

1) To provide an overview of the automation anywhere enterprise platform architecture and components and explain in detail about the various features and functionalities of the AA working domain.
2) To provide in depth knowledge about the various components of AA software including development, runtime client and control room.
3) To Create bots using different types of recorders, Editor and Basics commands using automation anywhere platforms.
4) To apply bot creation methodologies for developing bots to solve any real world problem in IT Education and Banking Sectors.

MODULE-1
Introduction to Robotic Process Automation & Bot Creation
Introduction to RPA and use cases- Automation Anywhere Enterprises Platform-Advanced features and capabilities- Way to create bots-Conclusion.

MODULE-2
Web Control Room and Client
Introduction- Features Panel-Dashboard(Home,Bots,Devices, Audit, Workload,Insights)-Features Panel-Acitivity(View tasks in Progress and Scheduled Tasks)-Bots(View Bots uploaded and Credentials)-Devices(View Development and runtime clients and Device Pools)-Workload (Queues and SLA Calculatior)-Auditlog(View activities logged which are associated with web CR)-Administration(configure settings, users, roles, license and migration)-Demo of Exposed API's-Conclusion-Client introduction and conclusion.

MODULE-3
Bot Creator
Introduction-Recorders-Smart Recorders-Web recorders-Screen Recorders-Task Editor variables-command Library-Loop Command-Excel command-Database command-string operation command-XML command-Terminal Emulator command-PDF integration command-FTP command-PGP command- object cloning command-Error handling command-Manage windows control command-Workflow designer-Report designer-Best practices-Summary.

MODULE-4
Meta Bot and Bot Insight
Introduction-Metabot Designer-Megabot with AI sense-Bot Insight-transactional Analytics-Operational Analytics-Course key point.

PRINCIPAL
MOHAMED SATHAK A.J. COLLEGE OF ENGINEERING
EGATTUR-603 103.
KANCHIPURAM DT

MOHAMED SATHAK A J COLLEGE OF ENGINEERING
Sponsored by Mohamed Sathak Trust
(Approved by AICTE, New Delhi and Affiliated to Anna University, Chennai)
Siruseri IT Park, Egattur, Chennai 603 103

DEPARTMENT OF EEE &ECE

MODULE-5

Practice and Assessment session

Bot creation using recorders(Smart, Web and Screen),Bot creation to invoke database automation, FTP and PGB command execution by bots. Bot development using object cloning command.

Course Outcomes:

The students will be able to

CO1:Automate any sort of manual or repetitive human tasks by using the Automation anywhere tool.

CO2: Develop and deploy software bots which can performs automation task 24x7 without interruption.

CO3:Build an analytics boot that can be used in finance, stock market and banking sector.

MOHAMED SATHAK A.J. COLLEGE OF ENGINEERING - CHENNAI - 603 103.

PRINCIPAL
MOHAMED SATHAK A.J. COLLEGE OF ENGINEERING
EGATTUR 603 103.
KANCHIPURAM DT

MOHAMED SATHAK A J COLLEGE OF ENGINEERING
Sponsored by Mohamed Sathak Trust
(Approved by AICTE, New Delhi and Affiliated to Anna University, Chennai)
Siruseri IT Park, Egattur, Chennai 603 103

DEPARTMENT OF EEE & ECE

CO PO Mapping

Course Outcome	PO1	PO2	PO3	PO4	PO5	PO6	PO7	PO8	PO9	PO10	PO11	PO12
The students will be able to CO1:Automate any sort of manual or repetitive human tasks by using the Automation anywhere tool.	3	3	3					2		2	3	3
CO2:The students will be able to develop and deploy software bots which can performs automation task 24x7 without interruption	2	2	2									
CO3:The students will be able to build an analytics boot that can be used in finance, stock market and banking Sector.	3	2	3									

MOHAMED SATHAK A.J. COLLEGE OF ENGINEERING - CHENNAI - 603 103

PRINCIPAL
MOHAMED SATHAK A.J. COLLEGE OF ENGINEERING
EGATTUR-603 103.
KANCHIPURAM DT

MOHAMED SATHAK A J COLLEGE OF ENGINEERING
Sponsored by Mohamed Sathak Trust
(Approved by AICTE, New Delhi and Affiliated to Anna University, Chennai)
Siruseri IT Park, Egattur, Chennai 603 103

DEPARTMENT OF EEE & ECE

Agenda and Topics

Day 1	Introduction	Training Introduction
		Introduction to Automation Anywhere
	Web Control Room	Introduction
		Features Panel
		Features Panel - Dashboard (Home, Bots, Devices, Audit, Workload, Insights)
		Features Panel – Activity (View Tasks in Progress and Scheduled Tasks)
		Features Panel – Bots (View Bots Uploaded and Credentials)
		Features Panel – Devices (View Development and Runtime Clients and Device Pools)
		Features Panel – Workload (Queues and SLA Calculator)
		Features Panel – Audit Log (View Activities Logged which are associated with Web CR)
		Features Panel – Administration (Configure Settings, Users, Roles, License and Migration)
		Demo of Exposed API's
		Conclusion
Day 2	Client	Introduction
		Conclusion
	Bot Creator	Introduction
		Recorders
		Recorders - Smart Recorder
		Recorders - Screen Recorder
		Recorders - Web Recorder
		Task Editor
		Variables
		Command Library
		Command Library – Loop Command

MOHAMED SATHAK A.J. COLLEGE OF ENGINEERING CHENNAI - 603 103.

PRINCIPAL
MOHAMED SATHAK A.J. COLLEGE OF ENGINEERING
EGATTUR-603 103.
KANCHIPURAM DT

MOHAMED SATHAK A J COLLEGE OF ENGINEERING
Sponsored by Mohamed Sathak Trust
(Approved by AICTE, New Delhi and Affiliated to Anna University, Chennai)
Siruseri IT Park, Egattur, Chennai 603 103

DEPARTMENT OF EEE & ECE

Day 3	Bot Creator	Command Library – Excel Command
		Command Library – Database Command
		Command Library – String Operation Command
		Command Library – XML Command
		Command Library – Terminal Emulator Command
		Command Library – PDF Integration Command
		Command Library – FTP Command
		Command Library – PGP Command
		Command Library – Object Cloning Command
		Command Library – Error Handling Command
Day 4	Bot Creator	Manage Windows Control Command
		Workflow Designer
		Report Designer
		Best Practices
		Summary
	MetaBot	Introduction
		MetaBot Designer
		MetaBot With AI Sense
	Bot Insight	Introduction
		Transactional Analytics
		Operational Analytics

MOHAMED SATHAK A.J. COLLEGE OF ENGINEERING · CHENNAI - 603 103 ·

PRINCIPAL
MOHAMED SATHAK A.J. COLLEGE OF ENGINEERING
EGATTUR-603 103.
KANCHIPURAM DT

MOHAMED SATHAK A J COLLEGE OF ENGINEERING
Sponsored by Mohamed Sathak Trust
(Approved by AICTE, New Delhi and Affiliated to Anna University, Chennai)
Siruseri IT Park, Egattur, Chennai 603 103

DEPARTMENT OF EEE & ECE

Day 5	Key Elements of Training	Training Need Assessment (TNA)
		Pre-assessment
		Pre-requisites
		Writing Objectives
		Writing Assessments
	Training Delivery	Types of Instructions
		Gagne's 9 Events of Instructions
		Selecting the Methods for Training
		Linking Blooms Taxonomy with Instructional Strategy
		Facilitation Skills
		Scheduling
	Activities	Showcasing Demonstrations
		Working on Exercises
		Energizers and Ice Breakers
		Recap/windup
	Evaluation	Types of Evaluation
		Stages of Evaluation
		When to Evaluate
		Evaluation and Support
	Tips for the Trainer	Tips for the Trainer
	Conclusion	Course Key Points
		Q&A

PRINCIPAL
MOHAMED SATHAK A.J. COLLEGE OF ENGINEERING
EGATTUR 603 103.
KANCHIPURAM DT

MOHAMED SATHAK A.J. COLLEGE OF ENGINEERING - CHENNAI - 603 103.

MOHAMED SATHAK A J COLLEGE OF ENGINEERING
Sponsored by Mohamed Sathak Trust
(Approved by AICTE, New Delhi and Affiliated to Anna University, Chennai)
Siruseri IT Park, Egattur, Chennai 603 103

DEPARTMENT OF EEE & ECE

Assessment

1) RPA with thinking and decision making capabilities are known as _____.

- A. internet process automation
- B.intelligent processor automation
- C.intelligent process automation
- D.intelligent process automatic

2) Intelligence Process Automation is a collection of next generation tools and business process improvements that help workers by eliminating routine and repetitive tasks.

- A. True
- B.False

3) Some of the key attributes which favor Assisted RPA are _____.

- A. Unclear inputs
- B.Social Context
- C.Task distribution
- D.All of the above

4) Processing of customer complaints can be automated using RPA.

- A. True
- B.False

5) Re-engineering the entire underlying process is part of _____

- A. BPM
- B.RPA
- C.Both A and B
- D.None of the above

PRINCIPAL
MOHAMED SATHAK A.J. COLLEGE OF ENGINEERING
EGATTUR 603 103.
KANCHIPURAM DT

6) RPA is not suitable for processes that _____.

- A. are consistent
- B.are repetitive
- C.require constant human intervention
- D.Can't say

MOHAMED SATHAK A.J. COLLEGE OF ENGINEERING - CHENNAI - 603 103.

DEPARTMENT OF EEE & ECE

7) RPA enables _____.

- A. Cost based reduction
- B.Reduces delivery risk
- C.Easy integration
- D.All of the above

8) RPA can handle operations such as _____.

- A. writing emails
- B.claims processing
- C.document classification
- D.All of the above

9) A robot can accumulate knowledge of procedures over time.

- A. True
- B.False

10) _____ factors make up being strong determinants of scalability and reliability in RPA process layered approach.

- A. Abstract
- B.Categorization
- C.Re-usability
- D.None of the above

11) The business benefits of RPA includes _____.

- A. Flexibility and Scalability
- B.Improved Accuracy
- C.Improved Employee Morale
- D.All of the above

PRINCIPAL
MOHAMED SATHAK A.J. COLLEGE OF ENGINEERING
EGATTUR-603 103.
KANCHIPURAM DT

12) In RPA Greater resilience is achieved through _____.

- A. Layered Configuration
- B.Functional approach
- C.Object-oriented approach
- D.All of the above

DEPARTMENT OF EEE & ECE

13) All the RPA tools provide both front and back office automation.

- A. Yes
- B.No
- C.May be
- D.Can't say

14) CRM systems can be streamlined using _____ tools.

- A. BPM
- B.RPA
- C.Both A and B
- D.None of the above

MOHAMED SATHAK A.J. COLLEGE OF ENGINEERING
EGATTUR 603 103.
KANCHIPURAM DT

MOHAMED SATHAK A J COLLEGE OF ENGINEERING
Sponsored by Mohamed Sathak Trust
(Approved by AICTE, New Delhi and Affiliated to Anna University, Chennai)
Siruseri IT Park, Egattur, Chennai 603 103

DEPARTMENT OF EEE & ECE
EVALUVATION SHEET

1) RPA with thinking and decision making capabilities are known as _____.

- (•) A. internet process automation
- B.intelligent processor automation
- C.intelligent process automation
- D.intelligent process automatic

2) Intelligence Process Automation is a collection of next generation tools and business process improvements that help workers by eliminating routine and repetitive tasks.

- (•) A. True
- B.False

3) Some of the key attributes which favor Assisted RPA are _____.

- A. Unclear inputs
- (•) B.Social Context
- C.Task distribution
- D.All of the above

4) Processing of customer complaints can be automated using RPA.

- A. True
- B.False

5) Re-engineering the entire underlying process is part of _____

- A. BPM
- (•) B.RPA
- C.Both A and B
- D.None of the above

6) RPA is not suitable for processes that _____.

- A. are consistent
- B.are repetitive
- (•) C.require constant human intervention
- D.Can't say

PRINCIPAL
MOHAMED SATHAK A.J. COLLEGE OF ENGINEERING
EGATTUR 603 103.
KANCHIPURAM DT

DEPARTMENT OF EEE & ECE

7) RPA enables _____.

- A. Cost based reduction
- B.Reduces delivery risk
- C.Easy integration
- D.All of the above

8) RPA can handle operations such as _____.

- A. writing emails
- B.claims processing
- C.document classification
- D.All of the above

9) A robot can accumulate knowledge of procedures over time.

- A. True
- B.False

10) _____ factors make up being strong determinants of scalability and reliability in RPA process layered approach.

- A. Abstract
- B.Categorization
- C.Re-usability
- D.None of the above

11) The business benefits of RPA includes _____.

- A. Flexibility and Scalability
- B.Improved Accuracy
- C.Improved Employee Morale
- D.All of the above

PRINCIPAL
MOHAMED SATHAK A.J. COLLEGE OF ENGINEERING
EGATTUR 603 103.
KANCHIPURAM DT

12) In RPA Greater resilience is achieved through _____.

- A. Layered Configuration
- B.Functional approach
- C.Object-oriented approach
- D.All of the above

MOHAMED SATHAK A.J. COLLEGE OF ENGINEERING CHENNAI - 603 103

DEPARTMENT OF EEE & ECE

13) All the RPA tools provide both front and back office automation.

- [x] A. Yes
- B.No
- C.May be
- D.Can't say

14) CRM systems can be streamlined using _____ tools.

- A. BPM
- [x] B.RPA
- C.Both A and B
- D.None of the above

11/14

MOHAMED SATHAK A.J. COLLEGE OF ENGINEERING · CHENNAI - 603 103 ·

PRINCIPAL
MOHAMED SATHAK A.J. COLLEGE OF ENGINEERING
EGATTUR 603 103.
KANCHIPURAM DT

MOHAMED SATHAK A J COLLEGE OF ENGINEERING
Sponsored by Mohamed Sathak Trust
(Approved by AICTE, New Delhi and Affiliated to Anna University, Chennai)
Siruseri IT Park, Egattur, Chennai 603 103

DEPARTMENT OF EEE & ECE

S.No	Register No.	EEE -Name of the Students	Status of Qualifying
1	311817105003	Ijaz Ahamed	Yes
2	311817105004	U.Mohamed Amrith	Yes
3	311817105007	Mohamed Nihath	Yes
4	311817105301	K.Hassian	Yes
5	311817105302	Khaja Mohideen	Yes

S.No	Register No.	ECE-Name of the Students	Status of Qualifying
1	311817106002	U.R.Hameed Ziyath	Yes
2	311817106003	J.Karan	Yes
3	311817106004	M.Mohamed Abdul Rahman	Yes
4	311817106005	G.Mohamed Shafiq Sharriff	Yes
5	311817106006	K.Muhammed Swalih	Yes
6	311817106008	C.Rajkumar	Yes
7	311817106010	G.Subash	Yes
8	311817106301	N.V.Sandhiya Roselin Mary	Yes

PRINCIPAL
MOHAMED SATHAK A.J. COLLEGE OF ENGINEERING
EGATTUR-603 103.
KANCHIPURAM DT

AUTOMATION ANYWHERE
Go be great.

U.Mohamed Amrith

PRINCIPAL
MOHAMED SATHAK A.J. COLLEGE OF ENGINEERING
EGATTUR 603103.
KANCHIPURAM DT

AUTOMATION ANYWHERE CERTIFIED **ADVANCED** RPA PROFESSIONAL

AUTOMATION ANYWHERE
AUTOMATION 360

Sundar Nagarathnam, Senior Vice President
Automation Anywhere University

AUTOMATION ANYWHERE
Go be great.

U.R.Hameed Ziyath

PRINCIPAL
MOHAMED SATHAK A.J. COLLEGE OF ENGINEERING
EGATTUR-603 103.
KANCHIPURAM DT

AUTOMATION ANYWHERE CERTIFIED **ADVANCED** RPA PROFESSIONAL

AUTOMATION ANYWHERE
AUTOMATION 360

Sundar Nagarathnam, Senior Vice President
Automation Anywhere University

AUTOMATION ANYWHERE
Go be great.

K.Hassian

MOHAMED SATHAK A.J. COLLEGE OF ENGINEERING - CHENNAI - 603 103.

PRINCIPAL
MOHAMED SATHAK A.J. COLLEGE OF ENGINEERING
EGATTUR-603 103.
KANCHIPURAM DT

AUTOMATION ANYWHERE CERTIFIED **ADVANCED** RPA PROFESSIONAL

AUTOMATION ANYWHERE
AUTOMATION 360

Sundar Nagarathnam, Senior Vice President
Automation Anywhere University

AUTOMATION ANYWHERE
Go be great.

Ijaz Ahamed

PRINCIPAL
MOHAMED SATHAK A.J. COLLEGE OF ENGINEERING
EGATTUR-603 103.
KANCHIPURAM DT

MOHAMED SATHAK A.J. COLLEGE OF ENGINEERING - CHENNAI - 603 103

AUTOMATION ANYWHERE CERTIFIED **ADVANCED** RPA PROFESSIONAL

AUTOMATION ANYWHERE
AUTOMATION 360

Sundar Nagarathnam, Senior Vice President
Automation Anywhere University

AUTOMATION ANYWHERE
Go be great.

J.Karan

MOHAMED SATHAK A.J. COLLEGE OF ENGINEERING · CHENNAI · 603 103 ·

PRINCIPAL
MOHAMED SATHAK A.J. COLLEGE OF ENGINEERING
EGATTUR 603 103.
KANCHIPURAM DT

AUTOMATION ANYWHERE CERTIFIED **ADVANCED** RPA PROFESSIONAL

AUTOMATION ANYWHERE
AUTOMATION 360™

Sundar Nagarathnam, Senior Vice President
Automation Anywhere University

AUTOMATION ANYWHERE
Go be great.

Khaja Mohideen

PRINCIPAL
MOHAMED SATHAK A.J. COLLEGE OF ENGINEERING
EGATTUR 603 103.
KANCHIPURAM DT

AUTOMATION ANYWHERE CERTIFIED **ADVANCED** RPA PROFESSIONAL

AUTOMATION ANYWHERE
AUTOMATION 360

Sundar Nagarathnam, Senior Vice President
Automation Anywhere University

AUTOMATION ANYWHERE
Go be great.

Mohamed Nihath

MOHAMED SATHAK A.J. COLLEGE OF ENGINEERING

PRINCIPAL
MOHAMED SATHAK A.J. COLLEGE OF ENGINEERING
EGATTUR 603 103.
KANCHIPURAM DT

AUTOMATION ANYWHERE CERTIFIED **ADVANCED** RPA PROFESSIONAL

AUTOMATION ANYWHERE
AUTOMATION 360

Sundar Nagarathnam, Senior Vice President
Automation Anywhere University

AUTOMATION ANYWHERE
Go be great.

M.Mohamed Abdul Rahman

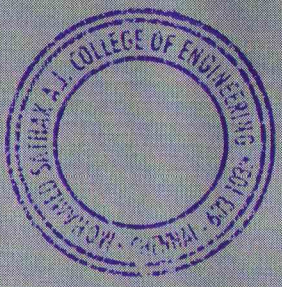

PRINCIPAL
MOHAMED SATHAK A.J. COLLEGE OF ENGINEERING
EGATTUR 603 103.
KANCHIPURAM DT

AUTOMATION ANYWHERE CERTIFIED **ADVANCED** RPA PROFESSIONAL

AUTOMATION ANYWHERE
AUTOMATION 360

Sundar Nagarathnam, Senior Vice President
Automation Anywhere University

AUTOMATION ANYWHERE
Go be great.

C.Rajkumar

MOHAMED SATHAK A.J. COLLEGE OF ENGINEERING

PRINCIPAL
MOHAMED SATHAK A.J. COLLEGE OF ENGINEERING
EGATTUR 603 103
KANCHIPURAM DT

AUTOMATION ANYWHERE CERTIFIED **ADVANCED** RPA PROFESSIONAL

AUTOMATION ANYWHERE
AUTOMATION 360

Sundar Nagarathnam, Senior Vice President
Automation Anywhere University

AUTOMATION ANYWHERE
Go be great.

N.V.Sandhiya
Roselin Mary

MOHAMED SATHAK A.J. COLLEGE OF ENGINEERING

PRINCIPAL
MOHAMED SATHAK A.J. COLLEGE OF ENGINEERING
EGATTUR 603103.
KANCHIPURAM DT

AUTOMATION ANYWHERE CERTIFIED **ADVANCED** RPA PROFESSIONAL

AUTOMATION ANYWHERE
AUTOMATION 360™

Sundar Nagarathnam, Senior Vice President
Automation Anywhere University

AUTOMATION ANYWHERE
Go be great.

G.Subash

MOHAMED SATHAK A.J. COLLEGE OF ENGINEERING • 603 103 • CHENNAI

PRINCIPAL
MOHAMED SATHAK A.J. COLLEGE OF ENGINEERING
EGATTUR 603 103.
KANCHIPURAM DT

AUTOMATION ANYWHERE CERTIFIED **ADVANCED** RPA PROFESSIONAL

AUTOMATION ANYWHERE
AUTOMATION 360

Sundar Nagarathnam, Senior Vice President
Automation Anywhere University

AUTOMATION ANYWHERE
Go be great.

G.Mohamed Shafiq Sharriff

PRINCIPAL
MOHAMED SATHAK A.J. COLLEGE OF ENGINEERING
EGATTUR 603 103
KANCHIPURAM DT

AUTOMATION ANYWHERE CERTIFIED **ADVANCED** RPA PROFESSIONAL

AUTOMATION ANYWHERE
AUTOMATION 360™

Sundar Nagarathinam, Senior Vice President
Automation Anywhere University

AUTOMATION ANYWHERE
Go be great.

K.Muhammed Swalih

PRINCIPAL
MOHAMED SATHAK A.J. COLLEGE OF ENGINEERING
EGATTUR 603 103.
KANCHIPURAM DT

AUTOMATION ANYWHERE CERTIFIED **ADVANCED** RPA PROFESSIONAL

AUTOMATION ANYWHERE
AUTOMATION 360

Sundar Nagarathnam, Senior Vice President
Automation Anywhere University

MOHAMED SATHAK A J COLLEGE OF ENGINEERING
Sponsored by Mohamed Sathak Trust
(Approved by AICTE, New Delhi and Affiliated to Anna University, Chennai)
Siruseri IT Park, Egattur, Chennai 603 103

ROBOTIC PROCESS AUTOMATION ATTENDACE- (2019-2020)

S.no	Reg. No. of the Student	Student Name	22.7.19	23.7.19	24.7.19	25.7.19	26.7.19	27.7.19	Total No. of hours	Attendance Percentage (%)
1	311817105003	Ijaz Ahamed	P	P	P	P	P	P	6	100
2	311817105004	Mohamed Amrith	P	P	P	P	P	P	6	100
3	311817105007	Mohamed Nihath N	P	P	P	P	P	P	6	100
4	311817105301	Hassain K	P	P	P	P	P	P	6	100
5	311817105302	Maf. Khaja Mohideen	P	P	P	P	P	P	6	100
6	311817106002	U.R.Hameed Ziyath	P	P	P	P	P	P	6	100
7	311817106003	J.Karan	P	P	P	P	P	P	6	100
8	311817106004	M.Mohamed Abdul Rahman	P	P	P	P	P	P	6	100
9	311817106005	G.Mohamed Shafiq Sharriff	P	P	P	P	P	P	6	100
10	311817106006	K.Muhammed Swalih	P	P	P	P	P	P	6	100
11	311817106008	C.Rajkumar	P	P	P	P	P	P	6	100
12	311817106010	G.Subash	P	P	P	P	P	P	6	100
13	311817106301	N.V.Sandhiya Roselin Mary	P	P	P	P	P	P	6	100

PRINCIPAL
MOHAMED SATHAK A.J. COLLEGE OF ENGINEERING
EGATTUR 603 103.
KANCHIPURAM DT

MOHAMED SATHAK A J COLLEGE OF ENGINEERING

Sponsored by Mohamed Sathak Trust

(Approved by AICTE, New Delhi and Affiliated to Anna University, Chennai)

Siruseri IT Park, Egattur, Chennai 603 103

Value Added Course Summary 2019-2020

Course code and Name : Robotic Process Automation (RPA)

Couse Duration : 45 hours

Years offered : III Year Students 2019-2020

Course Instructors : Mr.K.Vairaperumal

Course Outcome's :

The Students will be outfitted with able to automate any sort of manual or repetitive human tasks by using the Automation anywhere tool. Develop and deploy software bots which performs automation task 24x7 without interruption. Build an analytics boot that can used in finance, stock market and banking sector.

Couse Type : Self Framed Value Added Course

Theory and Practical with Hands on Sessions

Assessment Mode : Attendance : 45 Hours

Number of Participants : 10

Scheme of Exam : Offline

Date of Exam:28/7/2019

Course Coordinator

HoD

PRINCIPAL
MOHAMED SATHAK A.J.COLLEGE OF ENGINEERING
34, Rajiv Gandhi Road (OMR), Siruseri, IT Park
Chennai-603 103.

MOHAMED SATHAK A J COLLEGE OF ENGINEERING

Sponsored by Mohamed Sathak Trust

(Approved by AICTE, New Delhi and Affiliated to Anna University, Chennai)

Siruseri IT Park, Egattur, Chennai 603 103

Department of EEE

Students Enrolled List

Robotic Process Automation (RPA)

S.no	Reg. No. of the Student	Student Name
1	311817105003	Ijaz Ahamed
2	311817105004	Mohamed Amrith
3	311817105007	Mohamed Nihath N
4	311817105301	Hassain K
5	311817105302	Maf. Khaja Mohideen
6	311817106002	U.R.Hameed Ziyath
7	311817106003	J.Karan
8	311817106004	M.Mohamed Abdul Rahman
9	311817106005	G.Mohamed Shafiq Sharriff
10	311817106006	K.Muhammed Swalih
11	311817106008	C.Rajkumar
12	311817106010	G.Subash
13	311817106301	N.V.Sandhiya Roselin Mary

MOHAMED SATHAK A.J. COLLEGE OF ENGINEERING - CHENNAI - 603 103

PRINCIPAL
MOHAMED SATHAK A.J.COLLEGE OF ENGINEERING
34, Rajiv Gandhi Road (OMR). Siruseri, IT Park
Chennai-603 103.

MOHAMED SATHAK A J COLLEGE OF ENGINEERING

Sponsored by Mohamed Sathak Trust

(Approved by AICTE, New Delhi and Affiliated to Anna University, Chennai)

Siruseri IT Park, Egattur, Chennai 603 103

Department of EEE

Students Enrolled List

Robotic Process Automation (RPA)

S.no	Reg. No. of the Student	Student Name
14	311817104001	Aayisha M
15	311817104003	Asif Fayaz.S
16	311817104009	Jai Balaji.V
17	311817104016	Mohamed Nazeer.A
18	311817104021	Najeeha Banu.A
19	311817104022	Naveen Kumar.S
20	311817104023	Nithyadarshni S
21	311817104024	Rahamathullah K
22	311817104026	Ramesh S
23	311817104010	Jasir Hussain.S
24	311817104028	Santhosh Raja L
25	311817104027	Sabeer Ahamed S
26	311817104030	Shahid Yaaser
27	311817104019	Mohamed Suhail.M
28	311817104034	Venkatesan S
29	311817104029	Selciya J
30	311817104004	Dinesh D
31	311817104015	Mohamed Furose H
32	311817104031	Soundarya M
33	311817104017	Mohamed Riyaz M A
34	311817104025	Rahuman Gani
35	311817104018	Mohamed Sajed S
36	311817104020	Mohammed Sulaiman B
37	311817104012	Kesavan H
38	311817104005	Fahima S
39	311817104032	Syed Sahir Ahmed K
40	311817104013	Manoj K

Course Coordinator

HoD

PRINCIPAL
MOHAMED SATHAK A.J.COLLEGE OF ENGINEERING
34, Rajiv Gandhi Road (OMR), Siruseri IT Park
Chennai-603 103.

MOHAMED SATHAK A J COLLEGE OF ENGINEERING
Sponsored by Mohamed Sathak Trust
(Approved by AICTE, New Delhi and Affiliated to Anna University, Chennai)
Siruseri IT Park, Egattur, Chennai 603 103

DEPARTMENT OF ELECTRONICS AND COMMUNICATION ENGINEERING

From ,

Dr.E.Dhiravidachelvi
Associate Professor
Department of Electronics and communication Engineering,
Mohamed Sathak A.J.College of Engineering,
Chennai – 603103.

To

The Principal,
Mohamed Sathak A.J.College of Engineering,
Chennai – 603103.

Respected Madam/Sir,

Sub: Permission for conducting ADD on course – reg.

With reference to the above cited subject, we have proposed to conduct ADD on courses for the students of ECE department. The selected courses are useful to the students for learning the emerging technical fields.

Kindly provide the permission for the same.

Year/Sem	Title	Dates
IV ECE	IOT and Its Applications	16/12/2019 – 28/02/2020

PRINCIPAL
MOHAMED SATHAK A.J.COLLEGE OF ENGIN
Rajiv Gandhi Road (OMR), Siruseri, IT
Chennai-603 103.

Thanking you

Your's faithfully

Place : Chennai
Date 25/11/2019.

MOHAMED SATHAK A J COLLEGE OF ENGINEERING
Sponsored by Mohamed Sathak Trust
(Approved by AICTE, New Delhi and Affiliated to Anna University, Chennai)
Siruseri IT Park, Egattur, Chennai 603 103

DEPARTMENT OF ECE

From,

Dr.E.Dhiravidachelvi
Associate Professor
Department of Electronics and communication Engineering,
Mohamed Sathak A.J.College of Engineering,
Chennai – 603103.

Respected Madam/Sir,

Sub: Assigning of faculty for ADD ON course curriculum design for the academic year 2019-2020 reg.

Ref: Letter of Requisition for the appointment of faculty for ADD on course curriculum design for the academic year 2019-2020 Dated:16/12/2019 – 28/02/2020

The undersigned appreciates the department for proposing to conduct such kind of programme. As per your recommendation and referring to the above subject. I am pleased to nominate the following faculty members for ADD on course curriculum design.

The above listed faculty is hereby instructed to design the curriculum taking in to consideration the thrust areas of the respective field and ensure it should enhance the employability opportunities for the students.

PRINCIPAL
MOHAMED SATHAK A.J.COLLEGE OF ENGINEERING
34, Rajiv Gandhi Road (OMR), Siruseri, IT Park
Chennai-603 103.

Title	Name of the Faculty
IOT and Its Applications	Mr.S.Naveen kumar AP/ECE

MOHAMED SATHAK A J COLLEGE OF ENGINEERING
Sponsored by Mohamed Sathak Trust
(Approved by AICTE, New Delhi and Affiliated to Anna University, Chennai)
Siruseri IT Park, Egattur, Chennai 603 103

DEPARTMENT OF ECE

Date:18/11/2019
Ref:01/MSAJCE/ECE/EVEN/2019-2020

CIRCULAR

Our department is organizing a "ADD ON Course" on IOT and Its Applications during 16/12/2019 to 28.02.2020. The IV Year ECE Students. Register with Mr.S.Naveen kumar AP/ECE on or before 27/11/2019.

The session schedule is as follows

Timing: 9.00 AM to 3.30 PM

Venue: IOT LAB

HoD/ECE

PRINCIPAL
MOHAMED SATHAK A.J.COLLEGE OF ENGINEERING
34, Rajiv Gandhi Road (OMR), Siruseri, IT Park
Chennai-603 103.

MOHAMED SATHAK A J COLLEGE OF ENGINEERING
Sponsored by Mohamed Sathak Trust
(Approved by AICTE, New Delhi and Affiliated to Anna University, Chennai)
Siruseri IT Park, Egattur, Chennai 603 103

IOT AND ITS APPLICATION

SYLLABUS

Unit (i): Introduction to Internet of Things – applications/devices, protocols, communication model 9

Introduction – Overview of Internet of Things(IoT), the characteristics of devices and applications in IoT ecosystem, building blocks of IoT, Various technologies making up IoT ecosystem, IoT levels, IoT design methodology, The Physical Design/Logical Design of IoT, Functional blocks of IoT and Communication Models.

Unit (ii): Things and Connections 9

Working of Controlled Systems, Real-time systems with feedback loop e.g. thermostat in refrigrator, AC, etc. Connectivity models – TCPIP versus OSI model, different type of modes using wired and wireless methodology, The process flow of an IoT application.

Unit (iii): Sensors, Actuators and Microcontrollers 9

Sensor – Measuring physical quantities in digital world e.g. light sensor, moisture sensor, temperaturesensor,etc. Actuator – moving or controlling system e.g. DC motor, different type of actuators Controller – Role of microcontroller as gateway to interfacing sensors and actuators, microcontroller vs microprocessor, different type of microcontrollers in embedded ecosystem.

Unit: (iv) Building IoT applications 9

Introduction to Arduino IDE – writing code in sketch, compiling-debugging, uploading the file to Arduino board, role of serial monitor. Embedded 'C' Language basics – Variables and Identifiers, Built-in Data Types, Arithmetic operators and Expressions, Constants and Literals, assignment. Conditional Statements and Loops – Decision making using Relational Operators, Logical Connectives – conditions, if-else statement, Loops: while loop, do while, for loop, Nested loops, Infinite loops, Switch statement. Arrays – Declaring and manipulating single dimension arrays Functions – Standard Library of C functions in Arduino IDE, Prototype of a function: Formal parameter list, Return Type, Function call. Interfacing sensors

Unit: (v) Security and Future of IoT ecosystem 9

Need of security in IoT – Why Security? Privacy for IoT enabled devices- IoT security for consumer devices- Security levels, protecting IoT devices Future IoT eco system – Need of power full core for building secure algorithms, Examples for new trends – AI, ML penetration to IoT

PRINCIPAL
MOHAMED SATHAK A.J.COLLEGE OF ENGINEERING
34, Rajiv Gandhi Road (OMR), Siruseri, IT Park
Chennai-603 103.

Total Noof Hours: 45

Course coordinator

HOD/ECE.

MOHAMED SATHAK A J COLLEGE OF ENGINEERING
Sponsored by Mohamed Sathak Trust
(Approved by AICTE, New Delhi and Affiliated to Anna University, Chennai)
Siruseri IT Park, Egattur, Chennai 603 103

MOHAMED SATHAK A.J. COLLEGE OF ENGINEERING, Chennai - 603103

VAC - STUDENTS NAME LIST

Academic Year:2019-2020

Name of the Value Added Course : IOT and Its Applications				
Yr / Sem :IV/ VII ECE		Faculty In-charge : Mr.S.Naveen kumar ,AP/ECE		
Location : ONLINE		Duration :45 Hrs		
Sl.No	**Name of the Student**	**Register No.**	**Status of Qualifying**	**Sign of Student**
1.	Afshan Fathima. R	311816106002	Qualified	✓
2.	Ansari. M	311816106003	Qualified	✓
3.	Ayisha Sithikka. A	311816106004	Qualified	✓
4.	Badhurun Farhana. S	311816106005	Qualified	✓
5.	V.Chandrakala Yadav	311816106006	Qualified	✓
6.	Dharvash Mohaideen	311816106007	Qualified	✓
7.	Fayaz Ahamed. M	311816106008	Qualified	✓
8.	Fowzul Hafsa M.N	311816106009	Qualified	✓
9.	Kavinelavu. R	311816106010	Qualified	✓
10.	Mohamed Arsath. A	311816106011	Qualified	✓
11.	Mohammed Shadhir. J	311816106012	Qualified	✓
12.	Naga Priya. G	311816106013	Qualified	✓
13.	Nasreen Binti Sahul Hameed	311816106014	Qualified	✓
14.	Nausheen Banu. R	311816106015	Qualified	✓
15.	Priyanka. P	311816106017	Qualified	✓
16.	Raheel Fahima P.T.S	311816106018	Qualified	✓
17.	Salma Arifa. S	311816106019	Qualified	✓
18.	Santhosh Kumar. K	311816106020	Qualified	✓
19.	Shakirafathima. S	311816106021	Qualified	✓
20.	Stephin S.R	311816106022	Qualified	✓
21.	Sudharsan	311816106024	Qualified	✓
22.	Syed Ansari. N	311816106025	Qualified	✓
23.	Syed Peer Muhaideen K.H	311816106026	Qualified	✓
24.	Syed Salmaan Ashraf	311816106027	Qualified	✓
25.	Vaseeullah. C	311816106028	Qualified	✓
26.	Adarsh Durairaj.B	311816106701	Qualified	✓
27.	Mohamed Thanseer	311816106702	Qualified	✓

PRINCIPAL
MOHAMED SATHAK A.J.COLLEGE OF ENGINEERI
34, Rajiv Gandhi Road (OMR), Siruseri, IT Park
Chennai-603 103.

Head-Training

Signature of HoD with date

MOHAMED SATHAK A J COLLEGE OF ENGINEERING, Chennai - 603103

VAC-CCNA-IOT AND ITS APPLICATIONS

Department of ECE- Attendance from 16/12/2019 to 28/02/2020

S.no	Reg.number	Student Name	16-Dec-2019	17-Dec-2019	18-Dec-2019	19-Dec-2019	20-Dec-2019	23-Dec-2019	25-Dec-2019	26-Dec-2019	27-Dec-2019	31-Dec-2019	1-Jan-2020	2-Jan-2020	3-Jan-2020	4-Jan-2020	6-Jan-2020	7-Jan-2020	8-Jan-2020	9-Jan-2020	10-Jan-2020	11-Jan-2020	12-Jan-2020	17-Jan-2020	20-Jan-2020	21-Jan-2020	22-Jan-2020	23-Jan-2020	24-Jan-2020	27-Jan-2020	28-Jan-2020	29-Jan-2020	30-Jan-2020	31-Jan-2020	3-Feb-2020	4-Feb-2020	5-Feb-2020	6-Feb-2020	7-Feb-2020	10-Feb-2020	11-Feb-2020	12-Feb-2020	13-Feb-2020	14-Feb-2020	17-Feb-2020	18-Feb-2020	19-Feb-2020	20-Feb-2020	21-Feb-2020	24-Feb-2020	25-Feb-2020	26-Feb-2020	27-Feb-2020	28-Feb-2020
1	311816106002	Afshan Fathima. R	/	/	/	/	/	/	/	/	/	/	/	/	/	/	/	/	/	a	/	/	/	/	/	/	/	/	/	/	/	/	/	/	/	/	/	/	/	a	/	/	/	/	/	/	/	/	/	/	/	/	/	/	/	/
2	311816106003	Ansari. M	/	/	/	/	/	/	/	/	/	/	/	/	/	/	/	/	/	/	/	/	/	/	/	/	/	/	/	/	/	a	/	/	/	/	/	/	/	/	/	/	/	/	/	/	/	/	/	/	/	/	/	/	/	/
3	311816106004	Ayisha Sithikka. A	/	/	/	a	/	/	/	/	/	/	a	/	/	/	/	/	/	/	/	/	/	/	/	/	/	/	/	/	/	/	/	/	/	/	/	/	/	/	/	/	/	/	/	/	/	/	/	/	/	/	/	/	/	/
4	311816106005	Badhurun Farhana. S	/	/	/	/	/	/	/	/	/	/	/	/	/	/	/	/	/	/	/	/	/	/	/	/	a	/	/	/	/	/	/	/	/	/	/	/	/	/	/	/	/	/	/	/	/	/	/	/	/	/	/	/	/	a
5	311816106006	V.Chandrakala Yadav	/	/	/	/	/	/	/	/	/	/	/	/	/	/	/	/	/	/	/	/	/	/	/	/	/	/	/	/	/	/	/	/	/	/	/	/	/	/	/	a	/	/	/	/	/	/	/	/	/	/	/	/	/	/
6	311816106007	Dharvash Mohaideen	/	/	/	/	/	/	/	a	/	/	/	/	/	/	a	/	/	/	/	/	/	/	/	/	/	/	/	/	/	/	/	/	/	/	/	/	/	/	/	/	/	/	/	/	/	/	/	/	/	/	/	/	/	/
7	311816106008	Fayaz Ahamed. M	/	/	/	/	/	/	/	/	/	/	/	/	/	/	/	/	/	/	/	/	/	/	/	/	/	/	/	/	/	/	/	/	/	/	/	/	/	/	/	/	/	/	/	/	/	/	/	/	/	/	/	/	/	/
8	311816106009	Fowzul Hafsa M.N	/	/	/	/	/	/	/	/	/	/	/	/	/	/	/	/	/	/	/	/	/	/	/	/	/	/	/	/	/	/	/	/	/	/	/	/	/	a	/	/	/	/	/	/	/	/	/	/	/	/	/	/	/	/
9	311816106010	Kavinelavu. R	/	/	/	/	a	/	/	/	/	/	a	/	/	/	/	/	/	a	/	/	/	/	/	/	/	/	/	/	/	a	/	/	/	/	/	/	/	/	/	/	/	/	/	/	/	/	/	/	/	/	/	/	/	/
10	311816106011	Mohamed Arsath. A	/	/	/	/	/	/	/	/	/	/	/	/	/	/	a	/	/	/	/	/	/	/	/	/	/	/	/	/	/	/	/	/	/	/	/	/	/	/	/	/	/	/	/	/	/	/	/	/	/	/	/	/	/	a
11	311816106012	Mohammed Shadhir. J	/	/	/	/	/	/	a	/	/	/	/	/	/	/	/	/	/	/	/	/	/	/	/	/	/	/	/	/	/	/	/	/	/	/	/	/	/	/	/	/	/	/	/	/	/	/	/	/	/	a	/	/	/	/
12	311816106013	Naga Priya. G	/	/	/	/	/	/	/	/	/	/	/	/	/	/	/	/	/	/	/	a	/	/	/	/	/	/	/	/	/	/	/	/	/	/	/	/	/	/	/	/	/	/	/	/	/	/	/	/	/	/	/	/	/	/
13	311816106014	Nasreen Binti Sahul Hameed	/	/	/	/	/	/	/	/	/	/	/	/	/	/	/	/	/	/	/	/	/	/	/	/	/	/	/	/	/	/	/	/	/	/	/	/	/	/	/	/	/	/	/	/	/	/	/	a	/	/	/	/	/	/
14	311816106015	Nausheen Banu. R	a	/	/	/	/	/	/	/	/	/	/	a	/	/	/	/	/	/	/	/	/	/	/	/	/	/	a	/	/	/	/	/	/	/	/	/	/	/	/	/	/	/	/	/	/	/	/	/	/	/	/	/	/	/
15	311816106017	Priyanka. P	/	/	/	/	/	/	/	/	/	/	/	/	/	/	/	/	/	/	/	/	/	/	/	/	/	/	/	/	/	/	/	/	/	/	/	/	/	/	/	/	/	/	/	/	/	/	/	/	/	/	/	/	/	/
16	311816106018	Raheel Fahima P.T.S	/	/	/	/	/	/	/	/	/	/	/	/	/	/	/	a	/	/	/	/	/	/	/	/	/	/	/	/	/	/	/	/	/	/	/	/	/	/	/	/	a	/	/	/	/	/	/	/	/	/	/	/	/	/
17	311816106019	Salma Arifa. S	/	/	/	/	/	/	/	/	/	/	/	/	/	/	/	/	/	/	/	/	/	/	/	/	/	/	/	/	/	/	/	/	/	/	/	/	/	/	/	/	/	/	/	/	/	/	/	/	/	/	/	/	/	/
18	311816106020	Santhosh Kumar. K	/	/	/	/	/	/	/	a	/	/	/	/	/	/	/	/	/	/	/	/	/	/	/	/	/	/	a	/	/	/	/	/	/	/	/	/	/	/	/	/	/	/	/	/	/	/	/	/	/	/	/	/	/	/
19	311816106021	Shakirafathima. S	a	/	/	/	/	/	/	/	/	/	/	/	/	/	/	/	/	/	/	a	/	/	/	/	/	/	/	/	/	/	/	/	/	/	/	/	/	/	/	/	/	/	/	/	/	/	/	/	/	/	/	/	/	a
20	311816106022	Stephin S.R	/	/	/	/	/	/	/	/	/	/	/	/	/	/	/	/	/	/	/	/	/	/	/	/	/	/	/	/	/	/	/	/	/	/	/	/	/	a	/	/	/	/	/	/	/	/	/	/	/	/	/	/	/	/
21	311816106024	Sudharsan	/	/	/	/	/	/	/	/	/	/	/	/	/	/	/	/	/	/	/	/	a	/	/	/	/	/	/	/	/	/	/	/	/	/	/	/	/	/	/	/	/	/	/	/	/	/	/	/	/	/	/	/	/	/
22	311816106025	Syed Ansari. N	/	/	/	/	/	/	/	/	/	/	/	a	/	/	/	/	/	/	/	/	/	/	/	/	/	/	/	/	/	/	/	/	/	/	/	/	/	/	/	/	a	/	/	/	/	/	/	/	/	/	/	/	/	/
23	311816106026	Syed Peer Muhaideen K.H	/	/	/	/	/	/	/	a	/	/	/	/	/	/	/	/	/	/	/	/	/	/	/	/	/	/	/	/	/	/	/	/	/	/	/	/	/	/	/	/	/	/	/	/	/	/	/	/	a	/	/	/	/	/
24	311816106027	Syed Salmaan Ashraf	/	/	/	/	/	/	/	/	/	/	/	/	/	/	/	/	/	/	/	/	/	/	/	a	/	/	/	/	/	/	/	/	/	/	/	/	/	/	/	/	/	/	/	/	/	/	/	/	/	/	/	/	/	/
25	311816106028	Vaseeullah. C	/	/	/	/	/	/	/	/	/	/	/	/	/	/	/	/	/	/	/	/	/	/	/	/	/	/	/	/	/	/	/	/	/	/	/	/	/	/	/	a	/	/	/	/	/	/	/	/	/	/	/	/	/	/
26	311816106701	Adarsh Durairaj.B	/	/	/	/	a	/	/	/	/	/	/	/	/	/	/	/	/	/	/	/	/	/	/	/	/	/	/	/	/	/	/	/	/	/	/	/	/	/	/	/	/	/	/	/	/	/	/	/	/	a	/	/	/	/
27	311816106702	Mohamed Thanseer	/	/	/	/	/	/	/	a	/	/	/	/	/	/	a	/	/	/	/	/	/	/	/	/	/	/	/	/	/	/	a	/	/	/	/	/	/	/	/	/	/	/	/	/	/	/	/	/	/	/	/	/	/	/

Course coordinator

HOD

PRINCIPAL
MOHAMED SATHAK A.J. COLLEGE OF ENGINEERING
34, Rajiv Gandhi Road (OMR), Siruseri, IT Park
Chennai-603 103.

MOHAMED SATHAK A J COLLEGE OF ENGINEERING, Chennai - 603103

VAC-CCNA-IOT AND ITS APPLICATIONS

Department of ECE- ASSESMENT

S.no	Reg.number	Student Name	Assesment Marks
1	311816106002	Afshan Fathima. R	18
2	311816106003	Ansari. M	17
3	311816106004	Ayisha Sithikka. A	14
4	311816106005	Badhurun Farhana. S	15
5	311816106006	V.Chandrakala Yadav	16
6	311816106007	Dharvash Mohaideen	18
7	311816106008	Fayaz Ahamed. M	14
8	311816106009	Fowzul Hafsa M.N	15
9	311816106010	Kavinelavu. R	16
10	311816106011	Mohamed Arsath. A	17
11	311816106012	Mohammed Shadhir. J	18
12	311816106013	Naga Priya. G	20
13	311816106014	Nasreen Binti Sahul Hameed	20
14	311816106015	Nausheen Banu. R	19
15	311816106017	Priyanka. P	12
16	311816106018	Raheel Fahima P.T.S	13
17	311816106019	Salma Arifa. S	14
18	311816106020	Santhosh Kumar. K	17
19	311816106021	Shakirafathima. S	18
20	311816106022	Stephin S.R	19
21	311816106024	Sudharsan	16
22	311816106025	Syed Ansari. N	15
23	311816106026	Syed Peer Muhaideen K.H	17
24	311816106027	Syed Salmaan Ashraf	17
25	311816106028	Vaseeullah. C	18
26	311816106701	Adarsh Durairaj.B	19
27	311816106702	Mohamed Thanseer	18

PRINCIPAL
MOHAMED SATHAK A J.COLLEGE OF ENGINEERIN
Jn, Rajiv Gandhi Road (OMR), Siruseri, IT Park
Chennai-603 103.

Course coordinator

HOD

IOT and Its Applications

Assesment

14/20

Name: Salma Arifa.S
Year: III
Department: ECE.
Date:

---

1) How many numbers of the element in the open IoT architecture?

a. Four elements
b. Five elements
c. Six elements
d. Seven elements

2) Which of the following is the way in which an IoT device is associated with data?

a. Internet
b. Cloud
c. Automata
d. Network

3) Which of the following IoT networks has a very short range?

a. Short Network
b. LPWAN
c. SigFox
d. Short-range Wireless Network

What is the full form of the LPWAN?

a. Low Protocol Wide Area Network
b. Low Power Wide Area Network
c. Long Protocol Wide Area Network
d. Long Power Wide Area Network

5) An IoT network is a collection of _____ devices

a. Signal
b. Machine to Machine
c. Interconnected
d. Network to Network

PRINCIPAL
MOHAMED SATHAK A.J.COLLEGE OF ENGINEERING
34, Rajiv Gandhi Road (OMR), Siruseri, IT Park
Chennai-603 103.

6) Which one of the following is not an IoT device?

a. Amazon echo voice controller
b. Google Home
c. Nest Smoke Alarm

c. Message Queue Telemetry Things
d. Message Queue Telemetry Transport

15) What is the full form of ICT?
a. InterConnect Technology
b. Internet Connection Topology
c. Information and Communication Technology
d. Infer Communication Topology

16) Which of the following frequencies is correct for the Galileo gen 2 board?
a. 250 MHz
b. 400 MHz
c. 450 MHz
d. 300 MHz

17) What is the full form of IANA?
a. Inter-Assessment-Number-Access
b. Internet-Association-Numbers-Authority
c. International-Aid-for-Network-Authority
d. Internet-Assigned-Numbers-Authority

18) What is the standard port number of secure MQTT?
a. 1883
b. 8000
c. 8883
d. 8888

19) Which of the following layers provides end-to-end communication in IoT?
a. Logical layer
b. Data link layer
c. Transport layer
d. Session layer

20) Which of the following devices is used to measure the gases or liquid?
a. Optical Sensor
b. Gas Sensor
c. Smoke Sensor
d. Pressure sensor

PRINCIPAL
MOHAMED SATHAK A.J.COLLEGE OF ENGINEERING
34, Rajiv Gandhi Road (OMR), Siruseri, IT Park
Chennai-603 103.

MOHAMED SATHAK A.J. COLLEGE OF ENGINEERING

Approved by AICTE, New Delhi and Affiliated to Anna University Chennai ISO 9001-2008 Certified Institution
#34, Rajiv Gandhi Road (OMR), Siruseri, Chennai-603 103

Department of Electronics and communication Engineering

Certificate of Completion

This is to Certify Mr/Ms/Mrs NAUSHEEN BANU. R.

has successfully completed a value Added Course on "IoT And its Applications" from 16.12.2019 to 28.02.2020 conducted by Mohamed Sathak AJ College of Engineering.

PRINCIPAL
MOHAMED SATHAK A.J.COLLEGE OF ENGINEERING
34,Rajiv Gandhi Road (OMR), Siruseri, IT Park
Chennai-603 103

Mrs.E.Dhiravidachelvi
Convenor, HOD/ECE

Dr.S. SIVASUBRAMANIAN
Principal, MSAJCE

MOHAMED SATHAK A.J. COLLEGE OF ENGINEERING

Approved by AICTE, New Delhi and Affiliated to Anna University Chennai ISO 9001-2008 Certified Institution
#34, Rajiv Gandhi Road (OMR), Siruseri, Chennai-603 103

Department of Electronics and communication Engineering

Certificate of Completion

This is to Certify Mr/Ms/Mrs Priyanka.P

has successfully completed a value Added Course on "IoT And its Applications" from 16.12.2019 to 28.02.2020 conducted by Mohamed Sathak AJ College of Engineering.

MOHAMED SATHAK A.J.COLLEGE OF ENGINEERING
#34, Rajiv Gandhi Road (OMR), Siruseri, IT Park
Chennai-603 103.
PRINCIPAL

Mrs.E.Thiravidachelvi
Convenor, HOD/ECE

Dr.S. SIVASUBRAMANIAN
Principal, MSAJCE

MOHAMED SATHAK A.J. COLLEGE OF ENGINEERING

Approved by AICTE, New Delhi and Affiliated to Anna University Chennai ISO 9001-2008 Certified Institution
#34, Rajiv Gandhi Road (OMR), Siruseri, Chennai-603 103

Department of Electronics and communication Engineering

Certificate of Completion

This is to Certify Mr/Ms/Mrs SANTHOSH KUMAR. K

has successfully completed a value Added Course on "IoT And its Applications" from 16.12.2019 to 28.02.2020 conducted by Mohamed Sathak AJ College of Engineering.

Mrs.E.Dhiravidachelvi
Convenor, HOD/ECE

PRINCIPAL
MOHAMED SATHAK A.J.COLLEGE OF ENGINEEI
34, Rajiv Gandhi Road (OMR), Siruseri, IT Par
Chennai-603 103.

Dr.S. SIVASUBRAMANIAN
Principal, MSAJCE

MOHAMED SATHAK A.J. COLLEGE OF ENGINEERING

Approved by AICTE, New Delhi and Affiliated to Anna University Chennai ISO 9001-2008 Certified Institution
#34, Rajiv Gandhi Road (OMR), Siruseri, Chennai-603 103

Department of Electronics and communication Engineering

Certificate of Completion

This is to Certify Mr/Ms/Mrs SHAKIRA FATHIMA.S

has successfully completed a value Added Course on "IoT And its Applications" from 16.12.2019 to 28.02.2020 conducted by Mohamed Sathak AJ College of Engineering.

Mrs.E.Dhiravidachelvi
Convenor, HOD/ECE

PRINCIPAL
MOHAMED SATHAK A.J.COLLEGE OF ENGINEERING
Rajiv Gandhi Road (OMR), Siruseri IT Park
Chennai-603 103

Dr.S. SIVASUBRAMANIAN
Principal, MSAJCE

MOHAMED SATHAK A.J. COLLEGE OF ENGINEERING

Approved by AICTE, New Delhi and Affiliated to Anna University Chennai ISO 9001-2008 Certified Institution
#34, Rajiv Gandhi Road (OMR), Siruseri, Chennai-603 103

Department of Electronics and communication Engineering

Certificate of Completion

This is to Certify Mr/Ms/Mrs SALMA ARIFA.S

has successfully completed a value Added Course on "IoT And its Applications" from 16.12.2019 to 28.02.2020 conducted by Mohamed Sathak AJ College of Engineering.

Mrs.E.Dhiravidachelvi
Convenor, HOD/ECE

PRINCIPAL
MOHAMED SATHAK A.J.COLLEGE OF ENGINEERING
34,Rajiv Gandhi Road (OMR), Siruseri, IT Park
Chennai-603 103.

Dr.S. SIVASUBRAMANIAN
Principal, MSAJCE

MOHAMED SATHAK A.J. COLLEGE OF ENGINEERING

Approved by AICTE, New Delhi and Affiliated to Anna University Chennai ISO 9001-2008 Certified Institution
#34, Rajiv Gandhi Road (OMR), Siruseri, Chennai-603 103

Department of Electronics and communication Engineering

Certificate of Completion

This is to Certify Mr/Ms/Mrs FAYAZ AHAMED. M.

has successfully completed a value Added Course on "IoT And its Applications" from 16.12.2019 to 28.02.2020 conducted by Mohamed Sathak AJ College of Engineering.

PRINCIPAL
MOHAMED SATHAK A.J.COLLEGE OF ENGINEERING
34, Rajiv Gandhi Road (OMR), Siruseri Park
Chennai-603 103.

Mrs.E.Dhiravidachelvi
Convenor, HOD/ECE

Dr.S. SIVASUBRAMANIAN
Principal, MSAJCE

MOHAMED SATHAK A.J. COLLEGE OF ENGINEERING

Approved by AICTE, New Delhi and Affiliated to Anna University Chennai ISO 9001-2008 Certified Institution
#34, Rajiv Gandhi Road (OMR), Siruseri, Chennai-603 103

Department of Electronics and communication Engineering

Certificate of Completion

This is to Certify Mr/Ms/Mrs V. CHANDRAKALA YADAV.

has successfully completed a value Added Course on "IoT And its Applications" from 16.12.2019 to 28.02.2020 conducted by Mohamed Sathak AJ College of Engineering.

Mrs.E.Dhiravidachelvi
Convenor, HOD/ECE

PRINCIPAL
MOHAMED SATHAK A.J.COLLEGE OF ENGINEERING
34, Rajiv Gandhi Road (OMR), Siruseri, IT Park
Chennai-603 103.

Dr.S. SIVASUBRAMANIAN
Principal, MSAJCE

MOHAMED SATHAK A.J. COLLEGE OF ENGINEERING

Approved by AICTE, New Delhi and Affiliated to Anna University Chennai ISO 9001-2008 Certified Institution
#34, Rajiv Gandhi Road (OMR), Siruseri, Chennai-603 103

Department of Electronics and communication Engineering

Certificate of Completion

This is to Certify Mr/Ms/Mrs ANSARI. M.

has successfully completed a value Added Course on "IoT And its Applications" from 16.12.2019 to 28.02.2020 conducted by Mohamed Sathak AJ College of Engineering.

Mrs.E.Dhiravidachelvi
Convenor, HOD/ECE

PRINCIPAL
MOHAMED SATHAK A.J.COLLEGE OF ENGINEERING
34, Rajiv Gandhi Road (OMR), Siruseri, IT Park
Chennai-603 103.

Dr.S. SIVASUBRAMANIAN
Principal, MSAJCE

MOHAMED SATHAK A.J. COLLEGE OF ENGINEERING

Approved by AICTE, New Delhi and Affiliated to Anna University Chennai ISO 9001-2008 Certified Institution
#34, Rajiv Gandhi Road (OMR), Siruseri, Chennai-603 103

Department of Electronics and communication Engineering

Certificate of Completion

This is to Certify Mr/Ms/Mrs AFSHAN FATHIMA.R.

has successfully completed a value Added Course on "IoT And its Applications" from 16.12.2019 to 28.02.2020 conducted by Mohamed Sathak AJ College of Engineering.

Mrs.E.Dhiravidachelvi
Convenor, HOD/ECE

PRINCIPAL
MOHAMED SATHAK A.J.COLLEGE OF ENGINEERING
34, Rajiv Gandhi Road (OMR), Siruseri IT Park
Chennai-603 103.

Dr.S. SIVASUBRAMANIAN
Principal, MSAJCE

MOHAMED SATHAK A.J. COLLEGE OF ENGINEERING

Approved by AICTE, New Delhi and Affiliated to Anna University Chennai ISO 9001-2008 Certified Institution
#34, Rajiv Gandhi Road (OMR), Siruseri, Chennai-603 103

Department of Electronics and communication Engineering

Certificate of Completion

This is to Certify Mr/Ms/Mrs J. MOHAMED SHADHIR.

has successfully completed a value Added Course on "IoT And its Applications" from 16.12.2019 to 28.02.2020 conducted by Mohamed Sathak AJ College of Engineering.

PRINCIPAL
MOHAMED SATHAK A.J.COLLEGE OF ENGINEERING
34, Rajiv Gandhi Road (OMR), Siruseri, IT Park
Chennai-603 103.

Mrs.E.Dhiravidachelvi
Convenor, HOD/ECE

Dr.S. SIVASUBRAMANIAN
Principal, MSAJCE

MOHAMED SATHAK A J COLLEGE OF ENGINEERING
Sponsored by Mohamed Sathak Trust
(Approved by AICTE, New Delhi and Affiliated to Anna University, Chennai)
Siruseri IT Park, Egattur, Chennai 603 103

DEPARTMENT OF ELECTRONICS AND COMMUNICATION ENGINEERING

Value Added Course Summary 2019-2020

Course code and Name :IOT and its Applications

Couse Duration : 45 hours

Years offered : III YearStudents of ECE

Course Instructors :Mr.S.NaveenkumarAP/ ECE

Course Outcome's :

After completion of this course , students will be able to understand the application areas of IOT they can able to realize the revolution of Internet in Mobile Devices, Cloud & Sensor Networks and building blocks of Internet of Things and characteristics.

Couse Type : Add on course Organized By MSAJCE

Assessment Mode :

Attendance :45 Hours

Number of Participants :27

Scheme of Exam : Offline Assessment Examination

Date of Exam - : 28.02.2020

PRINCIPAL
MOHAMED SATHAK A.J.COLLEGE OF ENGINEERING
34, Rajiv Gandhi Road (OMR), Siruseri, IT Park
Chennai-603 103.

Course Coordinator

HOD/ECE

MOHAMED SATHAK A J COLLEGE OF ENGINEERING
Sponsored by Mohamed Sathak Trust
(Approved by AICTE, New Delhi and Affiliated to Anna University, Chennai)
Siruseri IT Park, Egattur, Chennai 603 103

DEPARTMENT OF MECHANICAL ENGINEERING

From ,

Dr.R.Senthil Kumar,

Professor,

Department of Mechanical Engineering,

Mohamed Sathak A.J.College of Engineering,

Chennai – 603103.

To

The Principal,

Mohamed Sathak A.J.College of Engineering,

Chennai – 603103.

Respected Madam/Sir,

Sub: Permission for conducting ADD on course – reg.

With reference to the above cited subject, we have proposed to conduct ADD on courses for the students of Mechanical department. The selected courses are useful to the students for learning the emerging technical fields.

Kindly provide the permission for the same.

Year/Sem	Title	Dates
III/V-Mechanical	Training on CATIA Solid Models	06.07.2020 to 14.07.2020

Thanking you

Place : Chennai

Your's faithfully

Date: 01.07.2020

PRINCIPAL
MOHAMED SATHAK A.J.COLLEGE OF ENGINEERING
34, Rajiv Gandhi Road (OMR), Siruseri, IT Park
Chennai-603 103.

Principal

PRINCIPAL
MOHAMED SATHAK A.J. COLLEGE OF ENGINEERING
No.34,Rajiv Gandhi Salai (OMR), SIPCOT - IT Park
Siruseri, Chennai - 603 103.

MOHAMED SATHAK A J COLLEGE OF ENGINEERING
Sponsored by Mohamed Sathak Trust
(Approved by AICTE, New Delhi and Affiliated to Anna University, Chennai)
Siruseri IT Park, Egattur, Chennai 603 103

DEPARTMENT OF MECHANICAL ENGINEERING

From ,

Dr.R.Senthil Kumar,

Professor,

Department of Mechanical Engineering,

Mohamed Sathak A.J.College of Engineering,

Chennai – 603103.

Respected Madam/Sir,

Sub: Assigning of faculty for VAC course curriculum design for the academic year 2019-2020-Reg

Ref: Letter of Requisition for the appointment of faculty for ADD on course curriculum design for the academic year 2019-2020 Dated: 06.07.2020 to 14.07.2020.

The undersigned appreciates the department for proposing to conduct such kind of programme. As per your recommendation and referring to the above subject. I am pleased to nominate the following faculty members for ADD on course curriculum design.

The above listed faculty is hereby instructed to design the curriculum taking in to consideration the thrust areas of the respective field and ensure it should enhance the employability opportunities for the students.

Title	Name of the Faculty
Training on CATIA Solid Models	Mr.S.Bharath AP/MECH

PRINCIPAL
MOHAMED SATHAK A.J.COLLEGE OF ENGINEERING
34, Rajiv Gandhi Road (OMR), Siruseri, IT Park
Chennai-603 103.

PRINCIPAL
MOHAMED SATHAK A.J. COLLEGE OF ENGINEERING
No.34 Rajiv Gandhi Salai (OMR), SIPCOT - IT Park
Siruseri, Chennai - 603 103.

Principal

MOHAMED SATHAK A.J. COLLEGE OF ENGINEERING - CHENNAI - 603 103

MOHAMED SATHAK A J COLLEGE OF ENGINEERING
Sponsored by Mohamed Sathak Trust
(Approved by AICTE, New Delhi and Affiliated to Anna University, Chennai)
Siruseri IT Park, Egattur, Chennai 603 103

DEPARTMENT OF MECHANICAL ENIGINEERING

Date:01.07.2020

Ref:MSAJCE/VAC02MECH/2020-2021

CIRCULAR

Our department is organizing a "ADD ON " on **Training on CATIA Solid Models** during 06.07.2020 to 14.07.2020. The following III Year Mechanical Students register with Mr.S.Bharath AP/MECH on or before 04.07.2020.

The session schedule is as follows

Timing: 9.00 AM to 1.00 PM

HoD
Head of the Department
Department of Mechinical Engineering
Mohamed Sathak A.J.College of Engineering
Egattur, Chennai - 603 103.

Copy To:

Dept. of Mechanical

III Year Mechanical

PRINCIPAL
MOHAMED SATHAK A.J.COLLEGE OF ENGINEERING
34, Rajiv Gandhi Road (OMR), Siruseri, IT Park
Chennai-603 103.

MOHAMED SATHAK A.J. COLLEGE OF ENGINEERING * CHENNAI - 603 103 *

MOHAMED SATHAK A J COLLEGE OF ENGINEERING
Sponsored by Mohamed Sathak Trust
(Approved by AICTE, New Delhi and Affiliated to Anna University, Chennai)
Siruseri IT Park, Egattur, Chennai 603 103

DEPARTMENT OF MECHANICAL ENGINEERING

COURSE MODULE

CourseObjectives:

The Students will acquire to

- Understand basis of graphical representation in the general context of Industrial Engineering.
- Apply expression and communication for the design, creation, definition and development of an industrial installation and/or product making practical use of the current technologies
- Create design shapes with 3D modeling, assembly, sheet metal design and visualization features
- Learn the implementation of solid modeling and get hands-on experience with the real world projects

MODULE

1	Surface Modeling & Assembly - An Overview
2	Wireframe & Surface design
3	Surfaces – Sweep - Multi section - surfaces - Trim operations - Generative shape design
4	Introduction to Assembly - Bottom up approach
5	Top down approach
6	Inserting of components
7	Assembly constrains
8	Introduction to Drafting
9	Visual Realism
10	Digital mockup Kinematics
11	Simple Mechanism Analysis
12	Introductio to Sheet Metal Design
13	Generative sheet metal design
14	Sheet metal design

PRINCIPAL
MOHAMED SATHAK A.J.COLLEGE OF ENGINEERING
34, Rajiv Gandhi Road (OMR), Siruseri, IT Park
Chennai-603 103.

15	Sketching
16	Lofted bend
17	Jog feature
18	Forming tools
19	Swept flange
20	Pattern and Drafting

PRINCIPAL
MOHAMED SATHAK A.J.COLLEGE OF ENGINEERING
34, Rajiv Gandhi Road (OMR), Siruseri, IT Park
Chennai-603 103.

MOHAMED SATHAK A.J. COLLEGE OF ENGINEERING * 603 103 * CHENNAI - 603

MOHAMED SATHAK A J COLLEGE OF ENGINEERING
Sponsored by Mohamed Sathak Trust
(Approved by AICTE, New Delhi and Affiliated to Anna University, Chennai)
Siruseri IT Park, Egattur, Chennai 603 103

DEPARTMENT OF MECHANICAL ENGINEERING

Course Outcome

Students will able to

- Interpret and/or convey the technical information in an industrial drawing
- Apply graphical representation techniques using traditional metric geometry and Know, identify, interpret and apply the current standards
- do assembly designing, sheet metal designing, and template based designing
- perform visual analysis and validation which will give them high quality performance insights for product decisions

PRINCIPAL
MOHAMED SATHAK A.J.COLLEGE OF ENGINEERING
34, Rajiv Gandhi Road (OMR), Siruseri, IT Park
Chennai-603 103.

MOHAMED SATHAK A J COLLEGE OF ENGINEERING
Sponsored by Mohamed Sathak Trust
(Approved by AICTE, New Delhi and Affiliated to Anna University, Chennai)
Siruseri IT Park, Egattur, Chennai 603 103

DEPARTMENT OF MECHANICAL ENGINEERING

CO PO Mapping

Course Outcome	PO1	PO2	PO3	PO4	PO5	PO6	PO7	PO8	PO9	PO10	PO11	PO12
Interpret and/or convey the technical information in an industrial drawing	3	3			3			2		2	3	2
Apply graphical representation techniques using traditional metric geometry and Know, identify, interpret and apply the current standards			2	2	2	2						
Do assembly designing, sheet metal designing, and template based designing	3	2	3									
Perform visual analysis and validation which will give them high quality performance insights for product decisions	3	3	3					3		2	3	3

PRINCIPAL
MOHAMED SATHAK A.J.COLLEGE OF ENGINEERING
34, Rajiv Gandhi Road (OMR), Siruseri, IT Park
Chennai-603 103.

MOHAMED SATHAK A.J. COLLEGE OF ENGINEERING - CHENNAI - 603 103.

MOHAMED SATHAK A J COLLEGE OF ENGINEERING
Sponsored by Mohamed Sathak Trust
(Approved by AICTE, New Delhi and Affiliated to Anna University, Chennai)
Siruseri IT Park, Egattur, Chennai 603 103

DEPARTMENT OF MECHANICAL ENGINEERING

Sl. No.	Topic	T / R* Book	Periods Required	Mode of Teaching
1	Surface Modeling & Assembly - An Overview	T	2	PPT
2	Wireframe & Surface design	T	2	Practical
3	Surfaces – Sweep - Multi section - surfaces - Trim operations - Generative shape design	T	2	Practical
4	Introduction to Assembly - Bottom up approach	T	2	PPT
5	Top down approach	T	2	Practical
6	Inserting of components	T	2	Practical
7	Assembly constrains	T	2	Practical
8	Introduction to Drafting	T	2	PPT
9	Visual Realism	T	2	Practical
10	Digital mockup Kinematics	T	3	Practical
11	Simple Mechanism Analysis	T	3	Practical
12	Introductio to Sheet Metal Design	T	2	PPT
13	Generative sheet metal design	T	3	PPT
14	Sheet metal design	T	3	Practical
15	Sketching	T	3	Practical
16	Lofted bend	T	2	Practical
17	Jog feature	T	2	Practical
18	Forming tools	T	2	Practical
19	Swept flange	T	2	Practical
20	Pattern and Drafting	T	2	Practical

PRINCIPAL
MOHAMED SATHAK A.J.COLLEGE OF ENGINEERING,
34, Rajiv Gandhi Road (OMR), Siruseri, IT Park
Chennai-603 103.

MOHAMED SATHAK A J COLLEGE OF ENGINEERING
Sponsored by Mohamed Sathak Trust
(Approved by AICTE, New Delhi and Affiliated to Anna University, Chennai)
Siruseri IT Park, Egattur, Chennai 603 103

DEPARTMENT OF MECHANICAL ENGINEERING

Quiz / Mini Projects / Model Develpoed if any	
Nil	
Text / Reference Books	
1	Notes on 3D Modelling and CAD Practice. Teachers of the Department of Graphic Expression. University College of Engineering of Vitoria-Gasteiz. 2010
2	DASSAULT SISTEMES Users Guide Part Design / Wireframe and surfaces / / Assembly design / Generative drafting /CATIA V5.
Website / URL References	
1	https://nptel.ac.in/courses/112/102/112102102/

PRINCIPAL
MOHAMED SATHAK A.J.COLLEGE OF ENGINEERING
34, Rajiv Gandhi Road (OMR), Siruseri, IT Park
Chennai-603 103.

MOHAMED SATHAK A.J. COLLEGE OF ENGINEERING * CHENNAI * 603 103

MOHAMED SATHAK A J COLLEGE OF ENGINEERING
Sponsored by Mohamed Sathak Trust
(Approved by AICTE, New Delhi and Affiliated to Anna University, Chennai)
Siruseri IT Park, Egattur, Chennai 603 103

DEPARTMENT OF MECHANICAL ENGINEERING

Sl.No	Name of the Student	Register No.	Status of Qualifying
1	311817114002	Abdul Basit	**Pass**
2	311817114003	Abdul Mukshith A	**Pass**
3	311817114004	Abdul Rahim A K	**Pass**
4	311817114006	Abdul Wahab A	**Pass**
5	311817114009	Ahamed Mukshith M	**Pass**
6	311817114011	Akash R	**Pass**
7	311817114013	Arun Prasath R	**Pass**
8	311817114014	Atheeq Mohammed Owaiz	**Pass**
9	311817114015	Azbaq Meeran F	**Pass**
10	311817114016	Chandrasekar G	**Pass**
11	311817114018	Gandhi Subash K	**Pass**
12	311817114022	Imran L	**Pass**
13	311817114023	Jamalul Ashraq I	**Pass**
14	311817114025	Karthickkumar M	**Pass**
15	311817114026	Kireesh Karan R	**Pass**
16	311817114027	Manikanda Venkataraman G	**Pass**
17	311817114028	Manoj Kumar K	**Pass**
18	311817114029	Mohamed Abubakker Siddiq S	**Pass**
19	311817114030	Mohamed Ali Hasan Seyed Abuthahi S A	**Pass**
20	311817114032	Mohamed Askar M	**Pass**
21	311817114033	Mohamed Fahim J	**Pass**
22	311817114034	Mohamed Irfan A	**Pass**
23	311817114035	Mohamed Irfan J	**Pass**
24	311817114036	Mohamed Irfan Ali S	**Pass**
25	311817114037	Mohamed Javidh M	**Pass**
26	311817114040	Mohamed Musraf B A	**Pass**
27	311817114041	Mohamed Reefdeen K	**Pass**
28	311817114042	Mohamed Sathik A	**Pass**
29	311817114043	Mohamed Suhail M	**Pass**

PRINCIPAL
MOHAMED SATHAK A.J.COLLEGE OF ENGINEERING
34, Rajiv Gandhi Road (OMR), Siruseri, IT Park
Chennai-603 103.

30	311817114044	Mohamed Yusuf J	**Pass**
31	311817114045	Mohammed Fayaas M	**Pass**
32	311817114047	Mohammed Zain J	**Pass**
33	311817114048	Muhamed Sufyan J	**Pass**
34	311817114050	Pandidurai R	**Pass**
35	311817114051	Sabik Mohammed S	**Pass**
36	311817114052	Sajidullah K	**Pass**
37	311817114054	Shakes Pear N	**Pass**
38	311817114056	Syed N Zaheer Abbas	**Pass**
39	311817114057	Usama A	**Pass**
40	311817114301	Gokul L	**Pass**
41	311817114302	Ibrahim A	**Pass**
42	311817114303	Jawahar Shalim S	**Pass**
43	311817114304	Mohamed Fardhan H	**Pass**
44	311817114305	Mohammed Nabeel M	**Pass**

PRINCIPAL
MOHAMED SATHAK A.J.COLLEGE OF ENGINEERING
34, Rajiv Gandhi Road (OMR), Siruseri, IT Park
Chennai-603 103.

MOHAMED SATHAK A.J. COLLEGE OF ENGINEERING * CHENNAI - 603 103 *

MOHAMED SATHAK A J COLLEGE OF ENGINEERING

DEPARTMENT OF MECHANICAL ENGINEERING

Training on CATIA Solid Models (VAC)

Time: 2 Hour

1. Create the 3D model and assemble the parts of the following diagram using CATIA V5 software (25 marks)

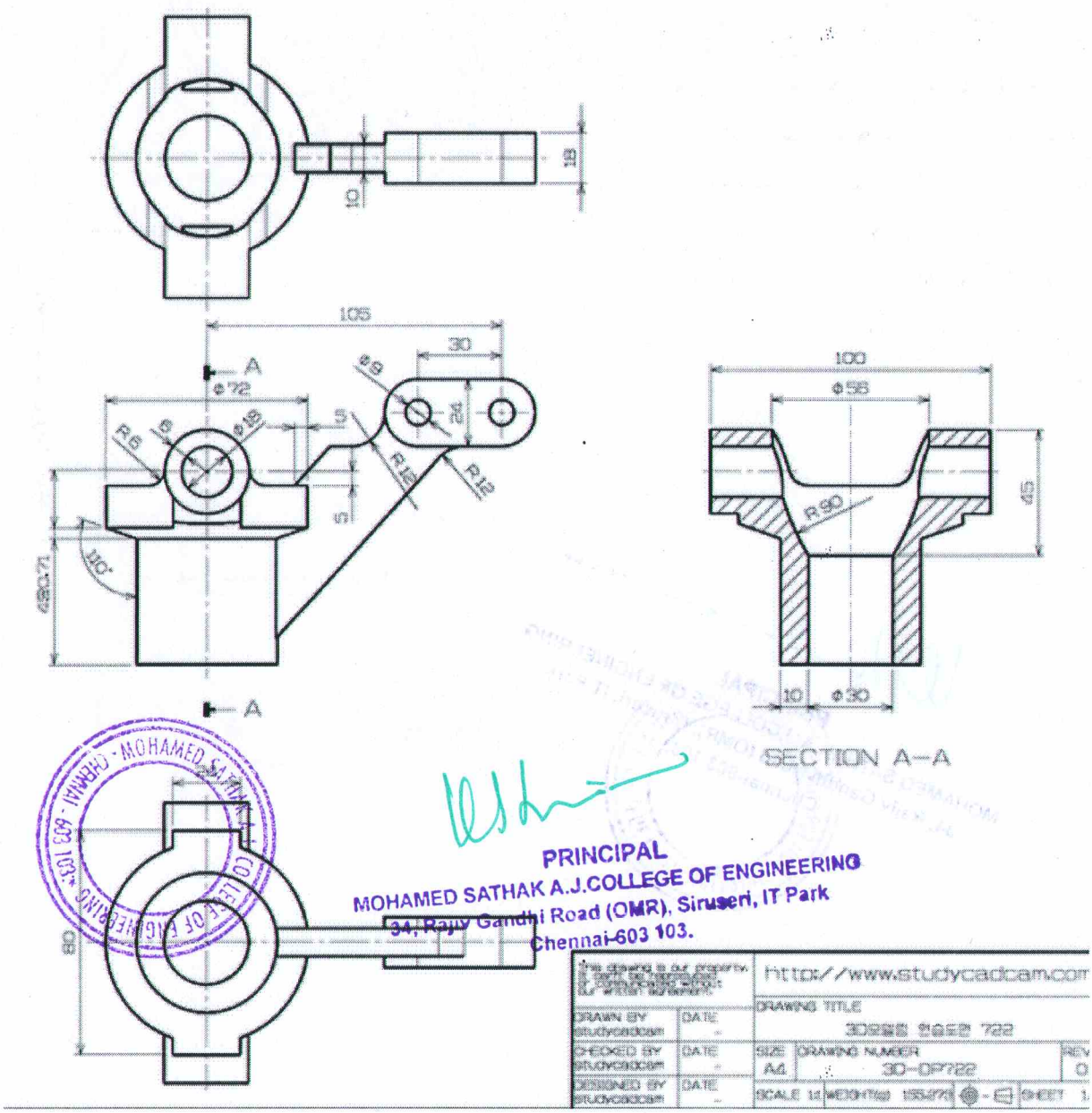

MOHAMED SATHAK A.J COLLEGE OF ENGINEERING - CHENNAI - 603 103

PRINCIPAL
MOHAMED SATHAK A.J.COLLEGE OF ENGINEERING
34, Rajiv Gandhi Road (OMR), Siruseri, IT Park
Chennai-603 103.

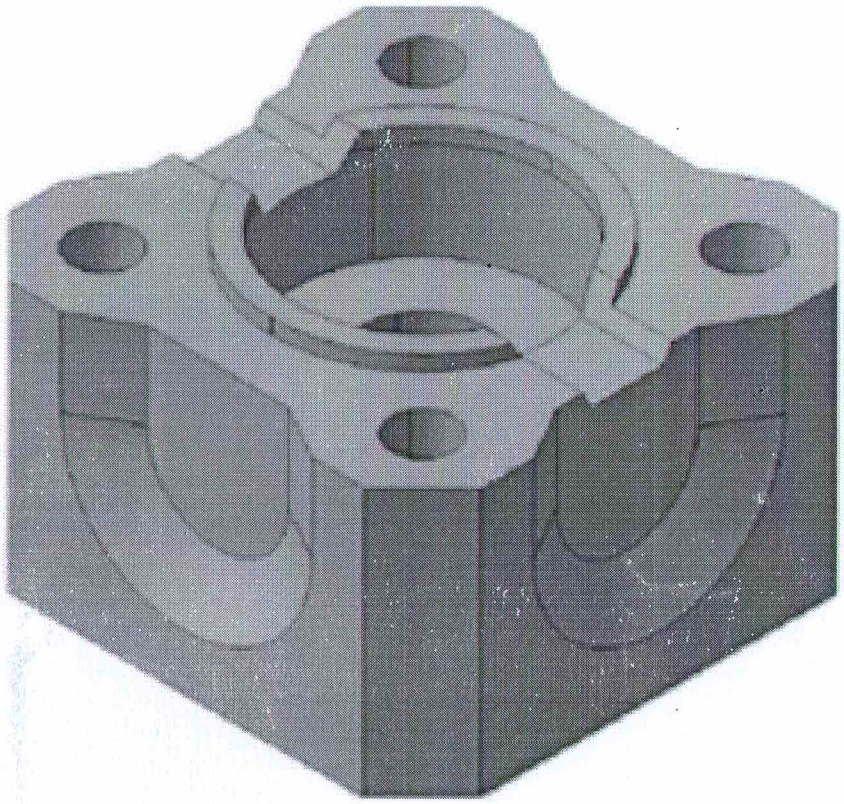

PRINCIPAL
MOHAMED SATHAK A.J.COLLEGE OF ENGINEERING
34, Rajiv Gandhi Road (OMR), Siruseri, IT Park
Chennai-603 103.

MOHAMED SATHAK A.J. COLLEGE OF ENGINEERING * 603 103 * CHENNAI

MOHAMED SATHAK
A.J. COLLEGE OF ENGINEERING

Estd - 2001

CERTIFICATE

OF COMPLETION

Awarded To

Abdul Basit

for completing the course on

Training on CATIA Solid Models

Course Completed on : 14-JULY-2020

Course Duration : 45 Hours

S.Bharath

Mr.S.BHARATH
Head-Training

PRINCIPAL
MOHAMED SATHAK A.J.COLLEGE OF ENGINEERING
34, Rajiv Gandhi Road (OMR), Siruseri, IT Park
Chennai-603 103.

Dr.R.SENTHIL KUMAR
Head of the Department

MOHAMED SATHAK A.J. COLLEGE OF ENGINEERING - CHENNAI

MOHAMED SATHAK
A.J. COLLEGE OF ENGINEERING

Estd · 2001

CERTIFICATE

OF COMPLETION

Awarded To

Abdul Mukshith A

for completing the course on

Training on CATIA Solid Models

Course Completed on : 14-JULY-2020

Course Duration : 45 Hours

S.Bharath

Mr.S.BHARATH
Head-Training

PRINCIPAL
MOHAMED SATHAK A.J.COLLEGE OF ENGINEERING
34, Rajiv Gandhi Road (OMR), Siruseri, IT Park
Chennai-603 103.

Dr.R.SENTHIL KUMAR
Head of the Department

MOHAMED SATHAK A.J. COLLEGE OF ENGINEERING · CHENNAI - 603 103 ·

MOHAMED SATHAK
A.J. COLLEGE OF ENGINEERING

CERTIFICATE

OF COMPLETION

Awarded To

Abdul Rahim A K

for completing the course on

Training on CATIA Solid Models

Course Completed on : 14-JULY-2020

Course Duration : 45 Hours

S.Bharath

Mr.S.BHARATH
Head-Training

PRINCIPAL
MOHAMED SATHAK A.J.COLLEGE OF ENGINEERING
34, Rajiv Gandhi Road (OMR), Siruseri, IT Park
Chennai-603 103.

MOHAMED SATHAK A.J. COLLEGE OF ENGINEERING
CHENNAI - 603 103.

R. Senthil

Dr.R.SENTHIL KUMAR
Head of the Department

MOHAMED SATHAK
A.J. COLLEGE OF ENGINEERING

CERTIFICATE

OF COMPLETION

Awarded To

Abdul Wahab A

for completing the course on

Training on CATIA Solid Models

Course Completed on : 14-JULY-2020

Course Duration : 45 Hours

S.Bharath

Mr.S.BHARATH
Head-Training

PRINCIPAL
MOHAMED SATHAK A.J.COLLEGE OF ENGINEERING
34, Rajiv Gandhi Road (OMR), Siruseri, IT Park
Chennai-603 103.

Dr.R.SENTHIL KUMAR
Head of the Department

MOHAMED SATHAK
A.J. COLLEGE OF ENGINEERING

CERTIFICATE

OF COMPLETION

Awarded To

Ahamed Mukshith M

for completing the course on

Training on CATIA Solid Models

Course Completed on : 14-JULY-2020

Course Duration : 45 Hours

S.Bharath

Mr.S.BHARATH
Head-Training

PRINCIPAL
MOHAMED SATHAK A.J.COLLEGE OF ENGINEERING
34, Rajiv Gandhi Road (OMR), Siruseri, IT Park
Chennai-603 103.

R. Senthil

Dr.R.SENTHIL KUMAR
Head of the Department

MOHAMED SATHAK A.J. COLLEGE OF ENGINEERING · CHENNAI · 603 103.

MOHAMED SATHAK A J COLLEGE OF ENGINEERING
Sponsored by Mohamed Sathak Trust
(Approved by AICTE, New Delhi and Affiliated to Anna University, Chennai)
Siruseri IT Park, Egattur, Chennai 603 103

DEPARTMENT OF MECHANICAL ENGINEERING

From ,

Dr.R.Senthil Kumar,
Professor,
Department of Mechanical Engineering,
Mohamed Sathak A.J.College of Engineering,
Chennai – 603103.

To

The Principal,
Mohamed Sathak A.J.College of Engineering,
Chennai – 603103.

Respected Madam/Sir,

Sub: Permission for conducting ADD on course – reg.

With reference to the above cited subject, we have proposed to conduct ADD on courses for the students of Mechanical department. The selected courses are useful to the students for learning the emerging technical fields.

Kindly provide the permission for the same.

Year/Sem	Title	Dates
IV/VIII-Mechanical	Creo-Harness Design, GD&T Industrial Standard	07.12.2019 to 07.03.2020

Thanking you

Place : Chennai

Your's faithfully

Date: 21.11.2019

PRINCIPAL
MOHAMED SATHAK A.J. COLLEGE OF ENGINEERING
No.34,Rajiv Gandhi Salai (OMR), SIPCOT - IT Park
Siruseri, Chennai - 603 103.

Principal

PRINCIPAL
MOHAMED SATHAK A.J.COLLEGE OF ENGINEERING
34, Rajiv Gandhi Road (OMR), Siruseri, IT Park
Chennai-603 103.

MOHAMED SATHAK A J COLLEGE OF ENGINEERING
Sponsored by Mohamed Sathak Trust
(Approved by AICTE, New Delhi and Affiliated to Anna University, Chennai)
Siruseri IT Park, Egattur, Chennai 603 103

DEPARTMENT OF MECHANICAL ENGINEERING

From ,

Dr.R.Senthil Kumar,
Professor,
Department of Mechanical Engineering,
Mohamed Sathak A.J.College of Engineering,
Chennai – 603103.

Respected Madam/Sir,

Sub: Assigning of faculty for VAC course curriculum design for the academic year 2019-2020-Reg

Ref: Letter of Requisition for the appointment of faculty for ADD on course curriculum design for the academic year 2019-2020 Dated:07.12.2019 to 07.03.2020.

The undersigned appreciates the department for proposing to conduct such kind of programme. As per your recommendation and referring to the above subject. I am pleased to nominate the following faculty members for ADD on course curriculum design.

The above listed faculty is hereby instructed to design the curriculum taking in to consideration the thrust areas of the respective field and ensure it should enhance the employability opportunities for the students.

Title	Name of the Faculty
Crreo-Harness Design, GD&T-Industrial Standard	Mr.S.Deepak Kumar AP/MECH

Principal

PRINCIPAL
MOHAMED SATHAK A.J. COLLEGE OF ENGINEERING
No.34,Rajiv Gandhi Salai (OMR), SIPCOT - IT Park
Siruseri, Chennai - 603 103.

PRINCIPAL
MOHAMED SATHAK A.J.COLLEGE OF ENGINEERING
34, Rajiv Gandhi Road (OMR), Siruseri, IT Park
Chennai-603 103.

MOHAMED SATHAK A J COLLEGE OF ENGINEERING
Sponsored by Mohamed Sathak Trust
(Approved by AICTE, New Delhi and Affiliated to Anna University, Chennai)
Siruseri IT Park, Egattur, Chennai 603 103

DEPARTMENT OF MECHANICAL ENIGINEERING

Ref:0MSAJCE/VAC01MECH/2020-2021 Date:22.11.2019

CIRCULAR

Our department is organizing a "ADD ON " on Creo-Harness Design, GD&T-Industrial Standard during 07.12.2019 to 07.03.2020. The following IV Year Mechanical Students register with Mr.S.Deepak Kumar AP/MECH on or before 25.11.2019.

The session schedule is as follows

Timing: 9.00 AM to 3.30 PM

Venue: GF 103 ALTAIR LAB

HoD
Head of the Department
Department of Mechinical Engineering
Mohamed Sathak A.J.College of Engineering
Egattur, Chennai - 603 103

Copy To:

Dept. of Mechanical

IV Year Mechanical

MOHAMED SATHAK A.J. COLLEGE OF ENGINEERING CHENNAI - 603 103

PRINCIPAL
MOHAMED SATHAK A.J.COLLEGE OF ENGINEERING
34, Rajiv Gandhi Road (OMR), Siruseri, IT Park
Chennai-603 103.

MOHAMED SATHAK A J COLLEGE OF ENGINEERING
Sponsored by Mohamed Sathak Trust
(Approved by AICTE, New Delhi and Affiliated to Anna University, Chennai)
Siruseri IT Park, Egattur, Chennai 603 103

DEPARTMENT OF MECHANICAL ENGINEERING

COURSE MODULE

CourseObjectives:

The Students will acquire to

- Recognize proper application of GD&T
- Calculate geometric tolerances and boundaries
- learn basic skills of 2D sketching and drafting of field dimensions
- Develop a solution through group work.
- Communicate and present ideas and solutions to design problems

MODULE

1	Introduction to Geometric Dimension
2	GD&T standards
3	Criteria for selecting Datum features
4	Feature control frame representation
5	Interpretation of drawings & dimensions
6	Introduction to Geometric Tolerance
7	Types of Tolerances
8	Form- Profile- Orientation- Location- Run out
9	Maximum Material Condition (MMC)
10	Least Material Condition (LMC)
11	Regardless of Feature size (RFS)
12	Introduction to AutoCAD
13	Exercise on Position tolerance, Profile tolerance, fixed fastener
14	Sketch commands

PRINCIPAL
MOHAMED SATHAK A.J.COLLEGE OF ENGINEERING
34, Rajiv Gandhi Road (OMR), Siruseri, IT Park
Chennai-603 103.

15	Sketch entities
16	Sketch Tools
17	Sketch Settings
18	Advance Tools
19	ISO TR5460 for Gtol measurement
20	Introduction to Harness Design

PRINCIPAL
MOHAMED SATHAK A.J.COLLEGE OF ENGINEERING
34, Rajiv Gandhi Road (OMR), Siruseri, IT Park
Chennai-603 103.

MOHAMED SATHAK A J COLLEGE OF ENGINEERING
Sponsored by Mohamed Sathak Trust
(Approved by AICTE, New Delhi and Affiliated to Anna University, Chennai)
Siruseri IT Park, Egattur, Chennai 603 103

DEPARTMENT OF MECHANICAL ENGINEERING

Course Outcome

Students will able to

- Interpret GD&T and Engineering standardization on drawings using Creo
- Understand the fundamental concepts of GD&T
- Apply basic knowledge of sketching techniques and modify the dimensions with BIS standards.
- Illustrate to familiarize in two-dimensional drawings with AutoCAD.
- Manipulate drawings through editing and plotting techniques

PRINCIPAL
MOHAMED SATHAK A.J.COLLEGE OF ENGINEERING
34, Rajiv Gandhi Road (OMR), Siruseri, IT Park
Chennai-603 103.

MOHAMED SATHAK A J COLLEGE OF ENGINEERING
Sponsored by Mohamed Sathak Trust
(Approved by AICTE, New Delhi and Affiliated to Anna University, Chennai)
Siruseri IT Park, Egattur, Chennai 603 103

DEPARTMENT OF MECHANICAL ENGINEERING

CO PO Mapping

Course Outcome	PO 1	PO2	PO3	PO4	PO5	PO6	PO7	PO8	PO9	PO10	PO11	PO12
Interpret GD&T and Engineering standardization on drawings using Creo	3	3			3			2		2	3	2
Understand the fundamental concepts of GD&T	2	2	2									
Apply basic knowledge of sketching techniques and modify the dimensions with BIS standards.	3	2	3									
Illustrate to familiarize in two-dimensional drawings with AutoCAD.	3	3	3					2		2	3	3
Manipulate drawings through editing and plotting techniques	3	3										3

PRINCIPAL
MOHAMED SATHAK A.J.COLLEGE OF ENGINEERING
34, Rajiv Gandhi Road (OMR), Siruseri, IT Park
Chennai-603 103.

MOHAMED SATHAK A.J. COLLEGE OF ENGINEERING * CHENNAI - 603 103 *

MOHAMED SATHAK A J COLLEGE OF ENGINEERING
Sponsored by Mohamed Sathak Trust
(Approved by AICTE, New Delhi and Affiliated to Anna University, Chennai)
Siruseri IT Park, Egattur, Chennai 603 103

DEPARTMENT OF MECHANICAL ENGINEERING

Sl. No.	Topic	T / R* Book	Periods Required	Mode of Teaching
1	Introduction to Geometric Dimension	T	2	PPT
2	GD&T standards	T	2	PPT
3	Criteria for selecting Datum features	T	2	PPT
4	Feature control frame representation	T	2	Practical
5	Interpretation of drawings & dimensions	T	2	Practical
6	Introduction to Geometric Tolerance	T	2	PPT
7	Types of Tolerances	T	2	PPT
8	Form- Profile- Orientation- Location- Run out	T	2	Practical
9	Maximum Material Condition (MMC)	T	2	Practical
10	Least Material Condition (LMC)	T	3	Practical
11	Regardless of Feature size (RFS)	T	3	Practical
12	Introduction to AutoCAD	T	2	PPT
13	Exercise on Position tolerance, Profile tolerance, fixed fastener	T	3	Practical
14	Sketch commands	T	3	Practical
15	Sketch entities	T	3	Practical
16	Sketch Tools	T	2	Practical
17	Sketch Settings	T	2	Practical
18	Advance Tools	T	2	Practical
19	ISO TR5460 for Gtol measurement	T	2	Practical
20	Introduction to Harness Design	T	2	PPT

PRINCIPAL
MOHAMED SATHAK A.J.COLLEGE OF ENGINEERING
34, Rajiv Gandhi Road (OMR), Siruseri, IT Park
Chennai-603 103.

MOHAMED SATHAK A J COLLEGE OF ENGINEERING
Sponsored by Mohamed Sathak Trust
(Approved by AICTE, New Delhi and Affiliated to Anna University, Chennai)
Siruseri IT Park, Egattur, Chennai 603 103

DEPARTMENT OF MECHANICAL ENGINEERING

Quiz / Mini Projects / Model Develpoed if any	
Nil	
Text / Reference Books	
1	Cadfolks, Training Tutorial for AutoCAD 2016, CreateSpace Independent Publishing Platform
2	Gene R. Cogorno, Geometric Dimensioning and Tolerancing for Mechanical Design, McGraw Hill Professional
Website / URL References	
1	https://nptel.ac.in/courses/112/106/112106179/
2	https://www.youtube.com/watch?v=X_VepJhq_vk

MOHAMED SATHAK A.J. COLLEGE OF ENGINEERING CHENNAI - 603 103

PRINCIPAL
MOHAMED SATHAK A.J.COLLEGE OF ENGINEERING
34, Rajiv Gandhi Road (OMR), Siruseri, IT Park
Chennai-603 103.

MOHAMED SATHAK A J COLLEGE OF ENGINEERING
Sponsored by Mohamed Sathak Trust
(Approved by AICTE, New Delhi and Affiliated to Anna University, Chennai)
Siruseri IT Park, Egattur, Chennai 603 103

DEPARTMENT OF MECHANICAL ENGINEERING

Sl.No	Name of the Student	Register No.	Status of Qualifying
1	ABDUL RAHUMAN A	311816114001	**Pass**
2	ABINASH V	311816114002	**Pass**
3	ABUTHAHIR N	311816114003	**Pass**
4	AFROSE SHERIF S	311816114005	**Pass**
5	AHMED THAHER A	311816114006	**Pass**
6	AKIL AHAMED A	311816114007	**Pass**
7	ARUN N	311816114008	**Pass**
8	AZARUDEEN M F	311816114009	**Pass**
9	CHARAN KUMAR V G	311816114011	**Pass**
10	DHANANCHEZIAN K	311816114012	**Pass**
11	DINESH D	311816114014	**Pass**
12	GUHAN A	311816114015	**Pass**
13	HARIHARAN AKASH A	311816114016	**Pass**
14	HARISUNDAR V	311816114018	**Pass**
15	HITHAYATH RILWAN M	311816114019	**Pass**
16	IZSATH A	311816114020	**Pass**
17	JAYAPRAKASH D	311816114021	**Pass**
18	JUNAID AHAMED M	311816114022	**Pass**
19	KAMAL AMIRTHA RAJ S	311816114023	**Pass**
20	KARTHY M	311816114024	**Pass**
21	MARSITH MOHAMED N	311816114027	**Pass**
22	MOHAMAD ASGAR S	311816114028	**Pass**
23	MOHAMED ABDULLAH A	311816114029	**Pass**
24	MOHAMED ALTHAF M H	311816114030	**Pass**
25	MOHAMED ANAS KASSIM	311816114032	**Pass**
26	MOHAMED ASHIK S	311816114033	**Pass**
27	MOHAMED FAHEEM M F	311816114034	**Pass**
28	MOHAMED IBRAHIM T S	311816114035	**Pass**
29	MOHAMED IMRAN S	311816114036	**Pass**
30	MOHAMEDIMRAN KHAN M	311816114037	**Pass**

PRINCIPAL
MOHAMED SATHAK A.J. COLLEGE OF ENGINEERING
34, Rajiv Gandhi Road (OMR), Siruseri, IT Park
Chennai-603 103.

MOHAMED SATHAK A.J. COLLEGE OF ENGINEERING * CHENNAI - 603 103 *

31	MOHAMED IRFAN D	311816114038	**Pass**
32	MOHAMED ISMAIL P	311816114039	**Pass**
33	MOHAMMED MUBARAK	311816114040	**Pass**
34	MEERAN MOHIDEEN M	311816114301	**Pass**
35	MOHAMED SHARFRAS S	311816114302	**Pass**
36	MOHAMEDZIAUDEEN A	311816114303	**Pass**
37	MOHAMED MUZAHITH S.A.K	311816114041	**Pass**
38	MOHAMED SHAFIQUE. K	311816114042	**Pass**
39	MOHAMED SHAHIN. T	311816114043	**Pass**
40	MOHAMED SHATHIK. M	311816114044	**Pass**
41	MOHAMED SIRAJUDEEN. S	311816114045	**Pass**
42	MOHAMED SOHAIL. M	311816114046	**Pass**
43	MOHAMED VAHITH. D	311816114047	**Pass**
44	MOHAMED ZUBAIR M.A	311816114048	**Pass**
45	MOHAMED ZULFIGHAR. H	311816114049	**Pass**
46	MOHAMMED AASHIK. S	311816114050	**Pass**
47	MOHAMMED AFZAL. A	311816114051	**Pass**
48	MOHAMMED DHANISH. H.S	311816114052	**Pass**
49	MOHAMMED MUBASHIR	311816114053	**Pass**
50	MOHAN. B	311816114054	**Pass**
51	MUHAMMED MAIDEEN.K.S	311816114055	**Pass**
52	NIRMAL. R	311816114056	**Pass**
53	NURIL AMEEN.M	311816114057	**Pass**
54	PADMAGANESH . S	311816114058	**Pass**
55	PARTHIBAN. V	311816114059	**Pass**
56	RAHUL. M	311816114060	**Pass**
57	ROMIC FERNANDEZ. B	311816114062	**Pass**
58	SADHURUDHEEN. M	311816114063	**Pass**
59	SAHUL HAMEED. D	311816114064	**Pass**
60	SALMAAN HUSSAIN. N	311816114065	**Pass**
61	SANTHOSH. S	311816114067	**Pass**
62	SARAVANAN. K	311816114068	**Pass**
63	SARAVANAN. S	311816114069	**Pass**
64	SRIRAM. R	311816114072	**Pass**
65	STEWART SIMON.S	311816114073	**Pass**
66	SURIYAPRAKASH. S	311816114074	**Pass**
67	SYED MOHAMMED BAFAKY	311816114075	**Pass**
68	SYED RAFEEQ AHMED. A	311816114076	**Pass**
69	SYED THANVEER MAQSOOD. J.	311816114077	**Pass**

PRINCIPAL
MOHAMED SATHAK A.J.COLLEGE OF ENGINEERING
34, Rajiv Gandhi Road (OMR), Siruseri IT Park
Chennai-603 103.

70	THARIQ ANWAR. S	311816114078	**Pass**
71	THIRUMAVALAVAN. K	311816114079	**Pass**
72	VISHAL. D	311816114080	**Pass**
73	YASIR ARAFTH. S	311816114081	**Pass**
74	MOHAMED YASEEN	311816114304	**Pass**
75	SEENI MOHAMED.N	311816114305	**Pass**
76	SYED AFRITH.M	311816114701	**Pass**

PRINCIPAL
MOHAMED SATHAK A.J.COLLEGE OF ENGINEERING
34, Rajiv Gandhi Road (OMR), Siruseri, IT Park
Chennai-603 103.

MOHAMED SATHAK A.J. COLLEGE OF ENGINEERING * CHENNAI - 603 103 *

MOHAMED SATHAK A J COLLEGE OF ENGINEERING

DEPARTMENT OF MECHANICAL ENGINEERING

Value Added Course

Creo-Harness Design, GD& T- Industrial Standard

Time: 2 Hrs

1. Develop the **Creo-Harness Design, GD& T** the parts of the following diagram using CREO 5 software (50 marks) All the dimensions are in mm

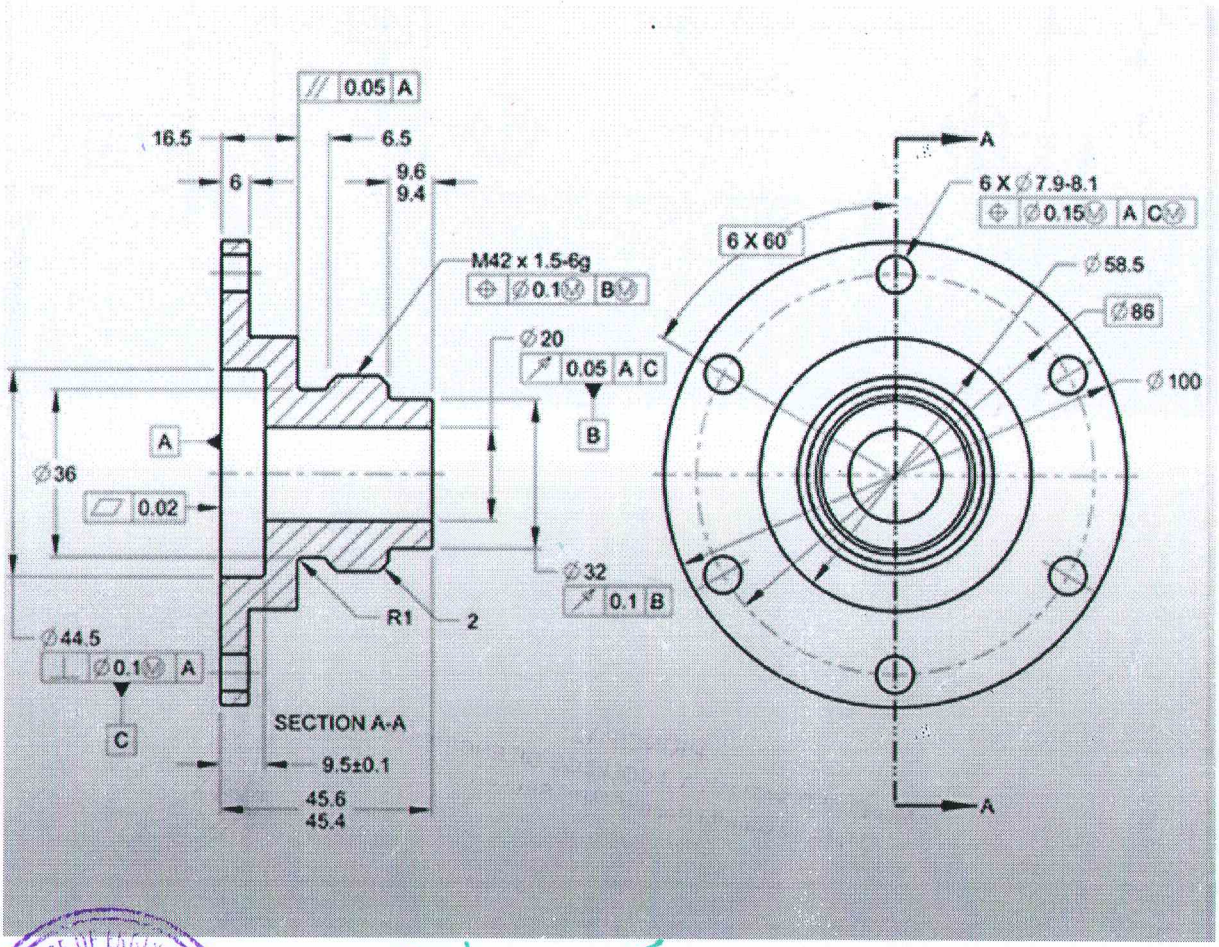

PRINCIPAL
MOHAMED SATHAK A.J.COLLEGE OF ENGINEERING
34, Rajiv Gandhi Road (OMR), Siruseri, IT Park
Chennai-603 103.

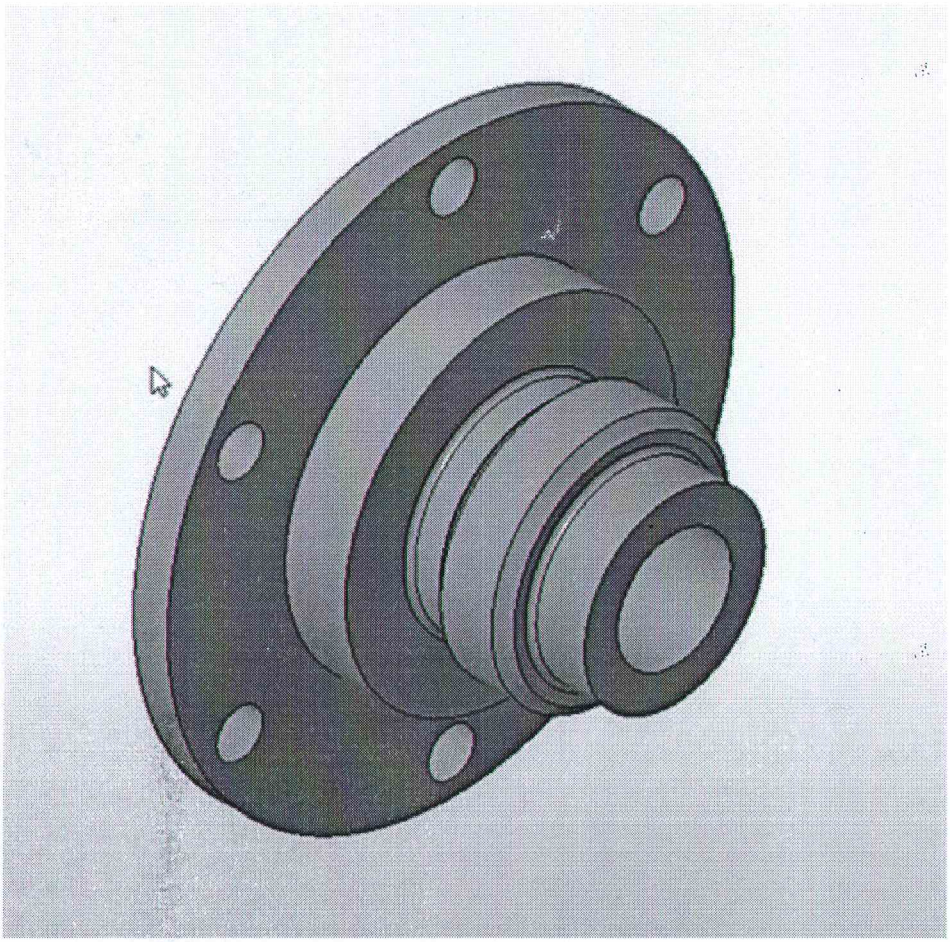

PRINCIPAL
MOHAMED SATHAK A.J.COLLEGE OF ENGINEERING
34, Rajiv Gandhi Road (OMR), Siruseri, IT Park
Chennai-603 103.

MOHAMED SATHAK A.J. COLLEGE OF ENGINEERING - CHENNAI - 603 103.

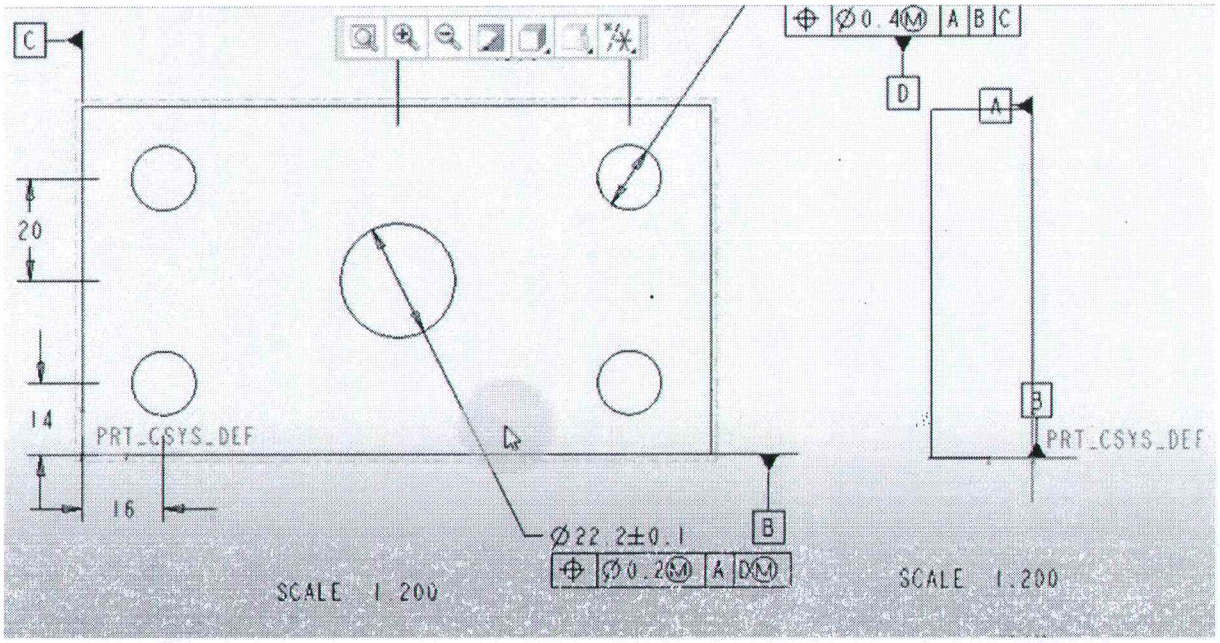

PRINCIPAL
MOHAMED SATHAK A.J.COLLEGE OF ENGINEERING
34, Rajiv Gandhi Road (OMR), Siruseri, IT Park
Chennai-603 103.

MOHAMED SATHAK A.J. COLLEGE OF ENGINEERING - CHENNAI - 603 103.

MOHAMED SATHAK
A.J. COLLEGE OF ENGINEERING

CERTIFICATE

OF COMPLETION

This Certificate is awarded to

ABDUL RAHUMAN A

for successfully completing the course of

CREO-Harness Desing, GD&T-Idustrial standard

Period : from 03-12-2019 to 09-03-2020

Deepak Kumar

Mr. S. Deepak Kumar
PRINCIPAL
MOHAMED SATHAK A.J.COLLEGE OF ENGINEERING
34, Rajiv Gandhi Road (OMR), Siruseri, IT Park
Chennai-603 103.

Head Training

Dr. R. Senthil KUmar
Head Of Department

MOHAMED SATHAK
A.J. COLLEGE OF ENGINEERING

Estd - 2001

CERTIFICATE

OF COMPLETION

This Certificate is awarded to

ABINASH V

for successfully completing the course of

CREO-Harness Desing, GD&T-Idustrial standard

Period : from 03-12-2019 to 09-03-2020

Deepak Kumar

Mr. S. Deepak Kumar
Head Training

R. Senthil

Dr. R. Senthil KUmar
Head Of Department

PRINCIPAL
MOHAMED SATHAK A.J.COLLEGE OF ENGINEERING
Rajiv Gandhi Road (OMR), Siruseri, IT Park

MOHAMED SATHAK A.J. COLLEGE OF ENGINEERING - CHENNAI - 603 103

MOHAMED SATHAK
A.J. COLLEGE OF ENGINEERING

Estd - 2001

CERTIFICATE

OF COMPLETION

This Certificate is awarded to

ABUTHAHIR N

for successfully completing the course of

CREO-Harness Desing, GD&T-Idustrial standard

Period : from 03-12-2019 to 09-03-2020

Deepak Kumar

Mr. S. Deepak Kumar

Head Training

Dr. R. Senthil KUmar

Head Of Department

PRINCIPAL
MOHAMED SATHAK A.J.COLLEGE OF ENGINEERING
34, Rajiv Gandhi Road (OMR), Siruseri, IT Park
Chennai-603 103.

MOHAMED SATHAK
A.J. COLLEGE OF ENGINEERING

Estd - 2001

CERTIFICATE

OF COMPLETION

This Certificate is awarded to

AFROSE SHERIF S

for successfully completing the course of

CREO-Harness Desing, GD&T-Idustrial standard

Period : from 03-12-2019 to 09-03-2020

Deepak Kumar

Mr. S. Deepak Kumar

Head Training

Dr. R. Senthil KUmar

Head Of Department

PRINCIPAL
MOHAMED SATHAK A.J.COLLEGE OF ENGINEERING
34, Rajiv Gandhi Road (OMR), Siruseri, IT Park

MOHAMED SATHAK
A.J. COLLEGE OF ENGINEERING

Estd - 2001

CERTIFICATE

OF COMPLETION

This Certificate is awarded to

AHMED THAHER A

for successfully completing the course of

CREO-Harness Desing, GD&T-Idustrial standard

Period : from 03-12-2019 to 09-03-2020

Deepak Kumar

Mr. S. Deepak Kumar
Head Training

R. Senthil

Dr. R. Senthil KUmar
Head Of Department

PRINCIPAL
MOHAMED SATHAK A.J.COLLEGE OF ENGINEERING
34, Rajiv Gandhi Road (OMR), Siruseri, IT Park
Chennai-603 103.

MOHAMEDSATHAKAJCOLLEGEOFENGINEERING
SponsoredbyMohamedSathakTrust
(ApprovedbyAICTE,NewDelhiandAffiliatedtoAnnaUniversity,Chennai)Sirus
eriITPark,Egattur,Chennai603103

DEPARTMENT OF SCIENCE & HUMANITIES

From,

Dr. A. Bala Krishnan

Associate Professor

Department of S&H

Mohamed Sathak A.J.College of Engineering,

Chennai–603103.

To

ThePrincipal,

Mohamed Sathak A.J.College of Engineering,

Chennai–603103.

RespectedMadam/Sir,

Sub:PermissionforconductingADDONcourse–reg.

With reference to the subject mentioned below, we have proposed to conduct ADD ON courses for all the I Year students. The selectedcourses will be usefultothestudentsforlearningtheemergingtechnicalfields.

Kindlyprovidethepermission forthesame.

Year/Sem	Title	Dates
IYear/IISem	PCHardware&Networking	17/02/2020 to 22/02/2020

Thankingyou

Your'sfaithfully

Place: Chennai

Date:02/02/2020

PRINCIPAL
MOHAMED SATHAK A.J.COLLEGE OF ENGINEERING
34, Rajiv Gandhi Road (OMR), Siruseri, IT Park
Chennai-603 103.

MOHAMED SATHAK A J COLLEGE OF ENGINEERING
Sponsored by Mohamed Sathak Trust
(Approved by AICTE, New Delhi and Affiliated to Anna University, Chennai)
Siruseri IT Park, Egattur, Chennai 603 103

From,

Dr. B. Muthukumar
Associate Professor
Department of Computer Science and Engineering
Mohamed Sathak A.J.College of Engineering,
Chennai- 603103.

Respected Madam/Sir,

Sub: Assigning of faculty for ADD ON course curriculum design for the academic year 2019-2020 reg.

Ref: Letter of Requisition for the appointment of faculty for ADD ON course curriculum design for the academic year 2019-2020 Dated: 17/02/2020 to 22/02/2020

The undersigned appreciates the department for proposing to conduct such kind of programme. As per your recommendation and referring to the above subject. I am pleased to nominate the following faculty members for ADD ON course curriculum design.

The above listed faculty is hereby instructed to design the curriculum taking into consideration the thrust areas of the respective field and ensure it should enhance the employability opportunities for the students.

Title	Name of the Faculty
PC Hardware & Networking	Mrs. V. Rajathi AP/CSE

PRINCIPAL
MOHAMED SATHAK A.J.COLLEGE OF ENGINEERING
34, Rajiv Gandhi Road (OMR), Siruseri, IT Park
Chennai-603 103.

MOHAMED SATHAK A J COLLEGE OF ENGINEERING
Sponsored by Mohamed Sathak Trust
(Approved by AICTE, New Delhi and Affiliated to Anna University, Chennai)
Siruseri IT Park, Egattur, Chennai 603 103

DEPARTMENT OF SCIENCE & HUMANITIES

Ref:01/MSAJCE/S&H/EVEN/2019 -2020

Date: 02/02/2020

CIRCULAR

It is hereby informed to all the 1st Year students that the value-added course **"PC Hardware & Networking"** during 17/02/2020 to 22/02/2020. All are advised to attend the training course without fail.

The session schedule is as follows

Timing: 9.00 AM to 3.30 PM

Resource Person: Mrs.V. Rajathi

Venue	4thFloor Auditorium	TF- 403	TF- 409	TF- 411
Faculties	Mrs.V. Rajathi	Ms. J. Nirmala	Mrs.R S. Lysa Packiam	Mrs.S.Babitha Rani

HoD

COPY TO: S&H
Dept. of S&H
I Year

PRINCIPAL
MOHAMED SATHAK A.J.COLLEGE OF ENGINEERING
34, Rajiv Gandhi Road (OMR), Siruseri, IT Park
Chennai-603 103.

MOHAMED SATHAK A J COLLEGE OF ENGINEERING
Sponsored by Mohamed Sathak Trust
(Approved by AICTE, New Delhi and Affiliated to Anna University, Chennai)
Siruseri IT Park, Egattur, Chennai 603 103

DEPARTMENT OF SCIENCE & HUMANITIES

COURSE MODULE

Course Objectives:

1. To develop programming skill to solve a problem
2. To gain knowledge about peripheral devices.
3. To acquire basic knowledge about computer hardware.
4. To acquire knowledge about Installation and troubleshooting.
5. To know basic about TCP /IP, internet and Intranet.

MODULE-1: Basic networking concepts
Network topologies – Networking model – Network adapters – Cabling and troubleshooting

MODULE-2: IP Address
Static and DHCP IP Address – types of IP Address – Subnet Mask and Subnetting

MODULE-3: Inside the PC
Identification of PC – different blocks – Assembling the parts – Add on card identification

MODULE-4: Networking devices
Routers – Switches – Hubs – modems – wired and wireless technology

MODULE-5: WAN and Wireless LAN
Metro Ethernet – MPLS – WLAN security concepts.

Course Outcomes:

The students will be able to

CO1. Student will have in depth knowledge about basic of computer assembling.

CO2. Students have in depth knowledge about IP address

CO3. The student will able to know the basic of PC hardware

CO4. Students will have brief knowledge about computer networking and troubleshooting.

CO5. The student will able to know the networking devices.

PRINCIPAL
MOHAMED SATHAK A.J. COLLEGE OF ENGINEERING
34, Rajiv Gandhi Road (OMR), Siruseri, IT Park
Chennai-603 103.

MOHAMED SATHAK A J COLLEGE OF ENGINEERING
Sponsored by Mohamed Sathak Trust
(Approved by AICTE, New Delhi and Affiliated to Anna University, Chennai)
Siruseri IT Park, Egattur, Chennai 603 103

CO PO Mapping

Course Outcome	PO1	PO2	PO3	PO4	PO5	PO6	PO7	PO8	PO9	PO10	PO11	PO12
Networking concepts	3	2	2					3		3	3	3
Have in-depth knowledge of IP Address	3	2	2									
Identification of PC	3	3	3									
knowledge about various networking devices	3	3	3					3		2	3	3
WAN and Wireless LAN	3	2										2

PRINCIPAL
MOHAMED SATHAK A.J.COLLEGE OF ENGINEERING
34, Rajiv Gandhi Road (OMR), Siruseri, IT Park
Chennai-603 103.

MOHAMED SATHAK A J COLLEGE OF ENGINEERING
Sponsored by Mohamed Sathak Trust
(Approved by AICTE, New Delhi and Affiliated to Anna University, Chennai)
Siruseri IT Park, Egattur, Chennai 603 103

DEPARTMENT OF SCIENCE & HUMANITIES

S.No	Title	Topics to be Covered	T/R Books	Periods Required	Remarks
1	Network topologies	BUS, RING, MESH	T1/Website	1	PPT
		TREE, STAR	T1/Website	2	BB
2	Networking model	OSI model	T1/Website	1	PPT
		TCP / IP Model	T1/Website	2	BB
3	Network adapters	Basics, types and working	T1/Website	2	BB/PPT
		Cabling and troubleshooting	T1/Website	2	BB
4	IP Address	Static and DHCP IP Address	T1/Website	2	PPT
		Types of IP Address	T1/Website	2	PPT
5	Subnet Mask and Subnetting	Types and uses of subnet mask	T1/Website	2	PPT
		Uses of subnetting	T1/Website	2	PPT
6	Inside PC	Identification of PC	T1/Website	2	PPT
		Different blocks	T1/Website	2	BB
7	PC	Assembling and disassembling	T1/Website	3	PPT
		Add on card identification	T1/Website	2	BB

PRINCIPAL
MOHAMED SATHAK A.J. COLLEGE OF ENGINEERING
34, Rajiv Gandhi Road (OMR), Siruseri, IT Park
Chennai-603 103.

8	Networking devices	Routers, switches	T1/Website	2	PPT
		Hubs, Modems	T1/Website	2	PPT
9	WAN	Metro Ethernet	T1/Website	1	PPT
		MPLS	T1/Website	2	PPT
10	WLAN Security concepts	WLAN threats	T1/Website	1	PPT
		Security	T1/Website	2	BB

	Text / Reference Books
1	Mastering PC Hardware and Networking 1. Ajith Mittal (Author) 2. Ajay Rana (Author)
	Website / URL References
1	https://www.academia.edu/35218609/Computer_Networking_and_Hardware_Concepts
2	https://bie.tg.nic.in/Pdf/computerHardware.pdf

PRINCIPAL
MOHAMED SATHAK A.J.COLLEGE OF ENGINEERING
34, Rajiv Gandhi Road (OMR), Siruseri, IT Park
Chennai-603 103.

MOHAMED SATHAK A J COLLEGE OF ENGINEERING
Sponsored by Mohamed Sathak Trust
(Approved by AICTE, New Delhi and Affiliated to Anna University, Chennai)
Siruseri IT Park, Egattur, Chennai 603 103

Assessment

1. DHCP stands for_____

(a) Dynamic Host Control Protocol
(b) Dynamic Host Configuration Protocol
(c) Digital Host Configuration Protocol
(d) Digital Host Control Protocol

2.A group of computers and other devices connected together is called a network, and the concept of connected computers sharing resources is called .....

A) Networking
B) Inter-Network
C) Inter-Connection
D) Computer Group

3. The ..... layer change bits onto electromagnetic signals.

A) Physical
B) Transport
C) Data Link
D) Presentation

4. Which of the following is an application layer service?

A) Network virtual terminal
B) File transfer, access and management
C) Mail service
D) All of the above

5. Which is the main function of transport layer?

A) Node to node delivery
B) End to end delivery
C) Synchronization
D) Updating and maintaining routing tables

6. Select the format of the IP address.

(A) 34 bit
(B) 32 bit
(C) 16 bit
(D) 64 bit

PRINCIPAL
MOHAMED SATHAK A.J.COLLEGE OF ENGINEERING
34, Rajiv Gandhi Road (OMR), Siruseri, IT Park
Chennai-603 103.

7. Which protocol include in desktops and operating systems.

(A) IPv3 protocol
(B) IPv4 protocol
(C) Both IPv6 and IPv4 protocol
(D) IPv6 protocol

8. Which one are the stands of VLSM?

(A) Version Length Subnet Masking
(B) Version Length Surface Masking
(C) Variable Length Surface Masking
(D) Variable Length Subnet Masking

9. What is not used in media access control?

a) fiber distributed data interface
b) line ethernet
c) digital subscriber
d) None of these

10. Tokens are involved in a topology.

a) Star
b) hybrid
c) Bus
d) Ring

11. Star Topology is basically based on a central device _____ ?
a.HUB
b.Switch
c.gates
d.Both a and b

12. In a mesh topology, each device has a dedicated topology of

a.Multipoint linking
b.Point to point linking
c.None of Above
d.Both a and b

13. LAN has mostly used the topologies

a)Bus
b)ring
c)star
d)both of these

PRINCIPAL
SATHAK A.J.COLLEGE OF ENGINEERING
34, Rajiv Gandhi Road (OMR), Siruseri, IT Park
Chennai-603 103.

14. A program that contains nothing but strings of zeros and ones is called

a) Machine language program
b) Assembly language program
c) Interrupted program
d) Binary language program

15. What is the website's front page is called?

a) Browser page
b) Home page
c) Search page
d) Bookmark

16. RMI uses stub and skeleton for communication with the ---------- object

a) Client
b) Remote
c) Server
d) Any

17. The process of keeping addresses in memory for future use is called

a) Routing
b) Resolving
c) Caching
d) None

18. How is the data stored on the diskette?

a) Ink
b) Laser bubbles
c) Magnetism
d) Circuits

19. What is the collection of the hyperlinked document on the internet known as?

a) HTML
b) Email
c) WWW
d) Internet

20. What do you need to check serial and parallel port?

a) Port adapter
b) Logic probe
c) Loopback plug
d) All the above

PRINCIPAL
SATHAK A.J.COLLEGE OF ENGINEERING
Road (OMR), Siruseri, IT Park
Chennai-603 103.

MOHAMED SATHAK A J COLLEGE OF ENGINEERING
Sponsored by Mohamed Sathak Trust
(Approved by AICTE, New Delhi and Affiliated to Anna University, Chennai)
Siruseri IT Park, Egattur, Chennai 603 103

DEPARTMENT OF SCIENCE & HUMANITIES

Assessment

1. DHCP stands for_____

(a) Dynamic Host Control Protocol
(b) Dynamic Host Configuration Protocol
(c) Digital Host Configuration Protocol
(d) Digital Host Control Protocol

2.A group of computers and other devices connected together is called a network, and the concept of connected computers sharing resources is called .....

A) Networking
B) Inter-Network
C) Inter-Connection
D) Computer Group

3. The ..... layer change bits onto electromagnetic signals.

A) Physical
B) Transport
C) Data Link
D) Presentation

4. Which of the following is an application layer service?

A) Network virtual terminal
B) File transfer, access and management
C) Mail service
D) All of the above

5. Which is the main function of transport layer?

A) Node to node delivery
B) End to end delivery
C) Synchronization
D) Updating and maintaining routing tables

6. Select the format of the IP address.

(A) 34 bit
(B) 32 bit
(C) 16 bit
(D) 64 bit

PRINCIPAL
MUHAMED SATHAK A.J.COLLEGE OF ENGINEERING
34, Rajiv Gandhi Road (OMR), Siruseri, IT Park
Chennai-603 103.

7. Which protocol include in desktops and operating systems.

(A) IPv3 protocol
(B) IPv4 protocol
(C) Both IPv6 and IPv4 protocol
(D) IPv6 protocol

8. Which one are the stands of VLSM?

(A) Version Length Subnet Masking
(B) Version Length Surface Masking
(C) Variable Length Surface Masking
(D) Variable Length Subnet Masking

9. What is not used in media access control?

a) fiber distributed data interface
b) line ethernet
c) digital subscriber
d) None of these

10. Tokens are involved in a topology.

a) Star
b) hybrid
c) Bus
d) Ring

11. Star Topology is basically based on a central device _____ ?

a.HUB
b.Switch
c.gates
d.Both a and b

12. In a mesh topology, each device has a dedicated topology of

a.Multipoint linking
b.Point to point linking
c.None of Above
d.Both a and b

13. LAN has mostly used the topologies

a)Bus
b)ring
c)star
d)both of these

PRINCIPAL
MOHAMED SATHAK A.J.COLLEGE OF ENGINEERING
No. Rajiv Gandhi Road (OMR), Siruseri, IT Park
Chennai-603 103.

14. A program that contains nothing but strings of zeros and ones is called

a) Machine language program
b) Assembly language program
c) Interrupted program
d) Binary language program

15. What is the website's front page is called?

a) Browser page
b) Home page
c) Search page
d) Bookmark

16. RMI uses stub and skeleton for communication with the ---------- object

a) Client
b) Remote
c) Server
d) Any

17. The process of keeping addresses in memory for future use is called

a) Routing
b) Resolving
c) Caching
d) None

18. How is the data stored on the diskette?

a) Ink
b) Laser bubbles
c) Magnetism
d) Circuits

19. What is the collection of the hyperlinked document on the internet known as?

a) HTML
b) Email
c) WWW
d) Internet

20. What do you need to check serial and parallel port?

a) Port adapter
b) Logic probe
c) Loopback plug
d) All the above

PRINCIPAL
MOHAMED SATHAK A.J.COLLEGE OF ENGINEERING
34, Rajiv Gandhi Road (OMR), Siruseri, IT Park
Chennai-603 103.

MOHAMED SATHAK A J COLLEGE OF ENGINEERING
Sponsored by Mohamed Sathak Trust
(Approved by AICTE, New Delhi and Affiliated to Anna University, Chennai)
Siruseri IT Park, Egattur, Chennai 603 103

DEPARTMENT OF SCIENCE & HUMANITIES

S.NO	NAME OF THE STUDENT	REGISTER NO.	STATUS OF QUALIFYING
1	Aayathul Mufarak	311819114001	Qualified
2	Abdullah.B	311819114002	Qualified
3	Atef Jamaludeen	311819114003	Qualified
4	Balaji.J	311819114004	Qualified
5	Gokul M	311819114005	Qualified
6	Gunal.S	311819114006	Qualified
7	Helal Ahamed. M	311819114007	Qualified
8	Jahethsalman.B	311819114008	Qualified
9	Kabir Mohamed. A	311819114009	Qualified
10	Laxshan. M	311819114010	Qualified
11	Mohamed Arsath. M	311819114011	Qualified
12	Mohamed Shajith	311819114013	Qualified
13	Mohamed Towfic. A	311819114014	Qualified
14	Mohammed Irfan P	311819114015	Qualified
15	Mohammed Ismail. M	311819114016	Qualified
16	Mohamed Kurshith Ali	311819114017	Qualified
17	Mushrraf Ali S	311819114018	Qualified
18	Najubudeen. K	311819114019	Qualified
19	Sheik Hussain A	311819114020	Qualified
20	Umar Mubarak M	311819114021	Qualified
21	Ananduacharry M S	311819103001	Qualified
22	Appu N R	311819103003	Qualified

MOHAMED SATHAK A.J.COLLEGE OF ENGINEERING
34, Rajiv Gandhi Road (OMR), Siruseri, IT Park
Chennai-603 103.

23	Mahmood Shafeeq A	311819103004	Qualified
24	Riyas Ahamed A	311819103005	Qualified
25	Shahith Aslam S	311819103006	Qualified
26	Ahamed Ali H	311819106001	Qualified
27	Akshaya K	311819106002	Qualified
28	Ashwini A	311819106003	Qualified
29	Assifa A	311819106004	Qualified
30	Avula Suneel S	311819106005	Qualified
31	Bheulah G L	311819106006	Qualified
32	Chemudugunta Ajay Kumar	311819106007	Qualified
33	Hashim Aslam T	311819106008	Qualified
34	Jahangeer Nadir Khan P	311819106009	Qualified
35	Mohamed Abdullah M	311819106010	Qualified
36	Mohamed Salahudeen R	311819106011	Qualified
37	Mohammed Asif A	311819106012	Qualified
38	Mohammed Taheer R	311819106013	Qualified
39	Mohsin Khan M	311819106014	Qualified
40	Pattapu Prathyusha	311819106015	Qualified
41	Potu Ganga Manoj Kumar	311819106016	Qualified
42	Resma G	311819106017	Qualified
43	Rizwan Ahamed M	311819106018	Qualified
44	Sara A	311819106019	Qualified
45	Sudhir Reddy K	311819106021	Qualified
46	Syed Aakhib Mohammed	311819106022	Qualified

M.A.J. COLLEGE OF ENGINEERING
34, Rajiv Gandhi Road (OMR), Siruseri, IT Park
Chennai-603 103.

47	Talluru Adithya T	311819106023	Qualified
48	Fahed S	311819105001	Qualified
49	Mohammed Rijwan H	311819105002	Qualified
50	Sathiyan S	311819105003	Qualified
51	Stalin K	311819105005	Qualified
52	Ameer Sheriff A	311819205001	Qualified
53	Aship Akash T	311819205002	Qualified
54	Dharvish Mohiadeen S	311819205003	Qualified
55	Faizal S	311819205004	Qualified
56	Farhat Jabeen A	311819205005	Qualified
57	Fazil G	311819205006	Qualified
58	Faziya R	311819205007	Qualified
59	Ganga M	311819205008	Qualified
60	Lubna Fathima N	311819205009	Qualified
61	Mohamed Iqramullah S	311819205010	Qualified
62	Mohamed Moosa M	311819205011	Qualified
63	Mohamed Nazeem A	311819205012	Qualified
64	Mohamed Yunus P	311819205013	Qualified
65	Syed Mohammad Anas	311819205014	Qualified
66	Mohammed Faizal Khan	311819205015	Qualified
67	Mohammed Saad K	311819205016	Qualified
68	Md Zaid N	311819205017	Qualified
69	Murali	311819205018	Qualified
70	Muthu Raja M	311819205019	Qualified

PRINCIPAL
MOHAMED SATHAK A.J.COLLEGE OF ENGINEERING
Old Mahabalipuram Road (OMR), Siruseri, IT Park
Chennai-603 103.

71	Nabeel M	311819205021	Qualified
72	Naveeth Basha A	311819205022	Qualified
73	Nizamulhaq S	311819205023	Qualified
74	Parnandhi Rohan	311819205024	Qualified
75	Praveen Kumar S	311819205025	Qualified
76	Sameera Banu N	311819205026	Qualified
77	Shaheenah M	311819205027	Qualified
78	Shawkathulla S J	311819205028	Qualified
79	Sugaiel Fathima A	311819205030	Qualified
80	Vignesh S	311819205031	Qualified
81	Abdul Kadar S	311819104001	Qualified
82	Afrar Ahamed I	311819104002	Qualified
83	Amjath M	311819104003	Qualified
84	Anum Farheen	311819104004	Qualified
85	Ariharan T	311819104005	Qualified
86	Ashfaque Ahamed F	311819104006	Qualified
87	Atif Ahmed Ansari	311819104007	Qualified
88	Bazeer Ahamad V	311819104008	Qualified
89	Fadal Razin S	311819104009	Qualified
90	Fardeen Sha M	311819104010	Qualified
91	Fauwaaz Ashal	311819104011	Qualified
92	Hameed Jahufar Haja Aladuin N H	311819104012	Qualified
93	Hamza Adhnan Shakir M	311819104013	Qualified
94	Harine R	311819104015	Qualified

PRINCIPAL
MOHAMED SATHAK A J COLLEGE OF ENGINEERING
34, Rajiv Gandhi Road, Siruseri IT Park
Chennai-603 103.

95	Hussaina Parveen J B	311819104016	Qualified
96	Hyder Ali M	311819104017	Qualified
97	Javid Basha J	311819104018	Qualified
98	Karthikeyan R	311819104019	Qualified
99	Mohamed Aadil A	311819104020	Qualified
100	Mohamed Abul Faiz S	311819104021	Qualified
101	Mohamed Akil H	311819104022	Qualified
102	Mohamed Faiz Ali M	311819104023	Qualified
103	Mohamed Khan D	311819104024	Qualified
104	Mohamed Musaraf K	311819104025	Qualified
105	Muhammad Munshid P P	311819104026	Qualified
106	Muhammed Shibil C V	311819104027	Qualified
107	Musthabushira S M	311819104028	Qualified
108	Nafisa Mahira K M	311819104029	Qualified
109	Navaneethan P	311819104030	Qualified
110	Naveena R	311819104031	Qualified
111	Nithish B	311819104032	Qualified
112	Nowfal K	311819104033	Qualified
113	Prakash T	311819104034	Qualified
114	Prathiksha S	311819104035	Qualified
115	Puruchuri Venkata Krishtamma P	311819104036	Qualified
116	Rohith E S	311819104037	Qualified
117	Sajitha N	311819104038	Qualified
118	Salamath N	311819104039	Qualified

PRINCIPAL
MOHAMED SATHAK A.J.COLLEGE OF ENGINEERING
34, Rajiv Gandhi Road (OMR), Siruseri, IT Park
Chennai-603 103.

119	Salman Farish A J	311819104040	Qualified
120	Sanjay Khanna S	311819104041	Qualified
121	Shaafia Tasneem N	311819104042	Qualified
122	Shahidha K	311819104043	Qualified
123	Shalini S	311819104044	Qualified
124	Suhail Basha A	311819104045	Qualified
125	Susmitha V	311819104046	Qualified
126	Syed Suheab A	311819104047	Qualified
127	Syed Sulaiman Sait H	311819104048	Qualified
128	Tahir Jamal	311819104049	Qualified
129	Vanchinathan V	311819104050	Qualified
130	Vishal V	311819104051	Qualified
131	Yasar Arafarth S	311819104052	Qualified

PRINCIPAL
MOHAMED SATHAK A.J.COLLEGE OF ENGINEERING
34 Rajiv Gandhi Road (OMR), Siruseri, IT Park
Chennai-603 103.